BEAVER/SMC MOTORCOACH HISTORY & CHASSIS TYPES USED (1984-2009 BEAVER YEARS)

PART 1: Chassis Manufacturers, Types, History…pages 1-16

- Gillig Chassis
- Spartan Chassis
- SMC (Magnum chassis)
- Monaco (Roadmaster)

PART 2 – Additional Information ……pages 17-79

- Brand History/Company Background
- Other brands Class-A Diesel Pusher Chassis
- Roadmaster Chassis naming nomenclature
- Known Issues (frame cracking, fiberglass crazing, etc.)
- Recall links
- Suspension Types/Info
- Engine Info (types, HP/TQ ratings, Emissions technology, the Miller Cycle)
- Chassis VIN Decoders (for Gillig, Spartan, Magnum, Roadmaster)
- Model line-up and comparison (Safari, Beaver, Monaco, Holiday Rambler) and pricing info
- Koni versus Bilstein Shock discussion

PART 1: Chassis Manufacturers, Types, History

Company Ownership/Acquisitions:

- Beaver Company "Class A" DP (Diesel Pusher) production years: 1984 – 1994.
- Beaver was bought by Safari Motor Coach (SMC) in 1994.
- SMC/Beaver was acquired by Monaco in August 2001.
- Monaco built Beavers from 2002-2009.
- Monaco bought by Navistar in 2009 (No Beavers were produced after 2009)
- Navistar sold the RV division to Allied Specialty Vehicles in 2013 (REV Group)

Chassis Models, Configurations

Gillig chassis (Beaver years 1984 – 1998):

- ✓ **1984 – 1997 Marquis** 300, 365 series, (Cummins C8.3, or Cat 3208, 3176, C12, or DD 6V92T, 8V-92T; Allison HD-747 4-spd for Cummins B5.9, or Allison World MD-3060 transmission for the larger engines. Length: 36', 38' and 40'), GVWR 31,000 to 34,000 lbs.)
- ✓ **1989-1993 Contessa** (Cat 3208, Cummins C8.3, Length: 34' to 40', GVWR 29,000 to 31,000 lbs.)
- ✓ **1991-1992 Baronet** (Cat 3116, Allison MT643 4-spd, Length: 33' and 35', GVWR 25,000 lbs.)

The Gillig chassis (MH3208T) is a Raised Frame Rail, 8" x 3.5" x .25" U-Channel - Double Flange, Huck-bolted, using SAE 410 grade 960 Steel Stock.

The Gillig was a popular chassis for expensive, high-end DPs (Beaver, Country Coach & Foretravel) until 1997 when they left the RV market to focus on their school busses. It is a heavy-duty traditional raised-rail chassis. The Gillig chassis was available in a

straight frame or a stacked frame configuration. The chassis is constructed of two main frame rails which are connected by several cross members. Outriggers are attached to the frame rails for mounting the radiator, sidewalls, floor, and driving platform. The cross members and outriggers, as well as the suspension mounting brackets, are attached to the frame rails by Huck bolts.

There are four air suspension system combinations used on the Gillig chassis;
(1) the Ridewell air suspension (4-bags per axle) on the front and rear, or
(2) the Ridewell on the rear with the proprietary Gillig Air Ride suspension (2-bags per axle) on the front, or
(3) the Neway ARD (2-air bags per axle) on the front and rear, or
(4) the Neway ARD on the rear with the Gillig Air Ride on the front.

Prevost (Beaver years 1989-1992):

- ✓ **1989-1992 "Beaver XL"** 40-ft conversion (Detroit Diesel 8V-92TA 500 HP. ., Length: 40', GVWR 42,000 lbs.

The Prevost Le Mirage XL MTH-40 bus chassis: Body construction used stainless steel to window level. The subframe is Low-Alloy/High Tensile Steel. The Le Mirage was modified from the Prestige by adding a full-height windshield and eliminating the roof step. The 102-inch width was introduced in 1983 as the XL option which has become the standard model. The standard powertrain package consisted of the Detroit Diesel 8V92TA with an Allison HT-755 transmission. GVWR is listed as 42,000 lbs. The conversion chassis includes a 10,000 tow hitch and has a liftable Tag Axle.

Spartan chassis (Beaver years 1993-1995):

Spartan entered the RV chassis business in 1986 and produced its first diesel-pusher RV chassis the following year.

EC-2000 EC=Economy Class ("P-Line"), GCWR 18,000 lbs.

- ✓ **1993 Patriot** (Cummins B5.9, Allison AT-542 4-spd transmission, Length: 31')

IC series IC=Intermediate Class ("N-Line"), GVWR 26,000 lbs.

- ✓ **1993-1995 Patriot** (Cummins C8.3 or Cat 3176, Allison MD-3060 6-spd, Length: 33', 36'-37', 38', and 40')
- ✓ 1**993 Baronet** (Cummins C8.3, Allison MD-3060, Length: 36' and 38')

Mountain Master Series "M-Line" MM=Heavy Class, GCWR 29,000 lbs.

- ✓ **1994 Acclaim** (Cummins C8.3, Allison MD-3060, Length: 36' and 38')
- ✓ **1994 Contessa** (Cummins C8.3, Allison MD-3060, Length: 36' and 38')

The Granning Air Glide Wide-Track suspension was used on the EC2000 series chassis front and rear. The Reyco Air Ride suspension, front and rear, was used on the heavier IC Series and Mountain Master (MM) chassis. The EC series chassis used Air-Over-Hydraulic brakes, and the IC and MM chassis had full Air Brakes.

SMC Magnum Chassis (Beaver years 1996-2002[1]):

All the Safari Motorcoach Corporation (SMC) Magnum chassis have the same basic design and share major componentry. They are all "Raised Rail" chassis for maximum storage and strength. All Magnum chassis use 9" high C-channel frame rails made from ASTM 572 high-yield schedule-50 steel, except the D-Series "Blue Diamond" chassis which uses a 10.25" high, schedule-50 high yield steel frame rails.

The end caps, side walls and fiberglass components were manufactured by SMC's subsidiary Composite Technologies, Inc. (CTI), and the electronics and electrical harnesses for both the chassis and house portion were manufactured by their subsidiary Electronic Design & Assembly, Inc. (ED&A).

[1] The SMC D-Series chassis was used by Monaco for the Marquis and Patriot from 2003-2005 and renamed as the Roadmaster M-series chassis.

B-Series (B30A300, B30A330) "Magnum Air":

- ✓ **1996 -2002 Patriot** (Cat 3126B), Allison MD3060 World transmission. Length: 33', 37', and 40', GVWR 30,000 lbs.
- ✓ **1998-2002 Contessa** (Cat 3126B/E optional Cummins ISL, Length: 38' and 40', GVWR listed as 28,000 lbs., 29,500, and 31,000 lbs).

C-Series (C31V425, C31A425 & C40A425) "Big Cat":

- ✓ **1998-2002 Patriot Thunder** (Cat C12), Allison MH4000 transmission, Length: 40' (only avail with Yorktown floor plan in 1998, then optional Thunder pkg for 1999+ for 40' models) GVWR 31,000 lbs.

S-Series (S26A330, S24E250 & S24E300) "Blue Streak":

- ✓ **1996-2002 Monterey** (Cat 3216),Allison MD3060 World transmission; Length: 30', 34', and 36', GVWR 26,000 lbs.

D-Series (D36A455 & D40A455) "Blue Diamond":

- ✓ **1998-2005 Marquis** **renamed "Roadmaster M10S-series by Monaco" in 2003 (Cat C12, Allison MH4000 transmission, Length: 36', 38' and 40', GVWR 32,000 lbs. (for 300 series) and 36,000 lbs. (for 365 series), and 44,400 lbs. with Tag Axle (for 2000 up models)
- ✓ **2003-2005 Patriot Thunder** ** renamed to "Roadmaster M10S-series by Monaco" in 2003 (2003 was first year for Patriot Tag Axle). See Monaco Roadmaster listings.
- ✓ **2000-2002 Solitaire** (Cat C12)
  The Solitaire used a modified Blue Diamond chassis with a custom Beaver Westport Retractor Tag Axle (14,600 lbs.). Length: 45', GVWR 52,200 lbs.

Magnum Chassis Suspension design attributes:

Magnum chassis provided several different suspension systems: rubber torsilastic, steel leaf spring, and air bag suspension. There are two different "air suspensions" used; the Reyco system is a four-bag system used on the

Monterey, and the Magnum Air that were used on the Marquis and Patriot, which is an eight-bag system.

- The **Magnum S-Series "Blue Streak"** chassis used on the Beaver Monterey, uses the ElliptiRide suspension (semi-elliptic leaf spring) or the Reyco air suspension. Brakes are Hydraulic-Over-Hydraulic (Bendix Hydro-Max).

- The **Magnum M-Series "Blue Max"** was built for Safari's Serengeti, Ivory, and Continental, it was not used on the Beavers. Suspension used is either the B.F. Goodrich “Velvet Ride” (torsional springs), or an Air Spring suspension, with hydraulic-over-hydraulic disc brakes (Bendix Hydro-Max).

- The **Magnum B-Series "Magnum Air"** In July 1995, SMC introduced the 1996 Patriot on the all-new Magnum B-Series chassis. The Magnum Air chassis uses four air bags per axle for a total of eight. This new Magnum chassis replaced a chassis from an outside chassis vendor (Spartan) that had been used since the Patriot model was introduced in 1992. The brakes are four-wheel disc or Air-Over-Hydraulic (Midland-Haldex). Frame rails are 9 inch high High-Yield Steel. No Tag Axle coaches were built with this chassis.

- The **Magnum C-Series “Big Cat”** The Magnum C-Series “Big Cat” chassis were developed to handle the higher horsepower “Thunder” option which had a 425-horsepower engine and the heavy-duty Allison MH 4000 series transmission, with later Thunder models getting the 505 HP Caterpillar C12. This chassis uses the Magnum Air suspension (8 air bags - four airbags per axle). Brakes are 4-wheel Disc with either Hydraulic-Over-Hydraulic (Bendix Hydro-Max) with Meritor-Wabco ABS with the Velvet-Ride suspension (Safari Panther), or Air-Over-Hydraulic (Midland-Haldex) with the Magnum Air suspension (Patriot Thunder). No Tax Axle coaches were built with this chassis.

- The **Magnum D-Series “Blue Diamond”** In 1998, Magnum developed a new chassis for the Beaver Marquis. Previously, the Marquis was constructed on a purchased Gillig brand chassis. Gillig ceased production of the chassis in 1997 and Magnum acquired the rights to manufacture the chassis from Gillig. After

making some modifications for the Marquis' specific requirements, they called this new chassis the Magnum D-Series chassis. It is a redesign of the heavy duty Gillig chassis used on the late 1990's Marquis. It uses the Magnum Air suspension (4 air-bags per axle, with 2 additional air bags for the Tag Axle when equipped) and has Rockwell four-wheel disc air brakes. Frame rails are 10-1/4 inch tall High-Yield Steel.

- The **Magnum R-Series** The Harney Renegade and Safari Continental are constructed on Magnum `R' series chassis with a Cat 300 or 330hp engine. The Renegade was targeted to the entry level Class A market.

- The **Magnum H-Series "Millennium"** – not used for Beaver coaches.

2003-2005 Beaver models (transition to Monaco)

SMC/Beaver was acquired by Monaco in August 2001, but production of the Beaver line continued at Beaver Bend, Oregon plant mid-2005. For as long as manufacturing continued at Bend, all Beaver models were constructed on the SMC Magnum chassis. During this transition Monaco just rebranded the "Magnum" name to the "Roadmaster M" series chassis.

After 2003 the Beaver Monterey, Patriot, and Marquis, which were all built in the original Beaver factory in Bend Oregon, began to incorporate Monaco designs. Obvious design changes that Monaco made were the addition of slide-out toppers, Cummins engines in some models (as opposed to the Cat engines that were used exclusively by SMC), the "Aladdin" engine monitor and on-board display system which used "tank pressure sensors" that could be displayed on all TVs (SMC used the "Silverleaf" monitoring system), the HWH Room Slide-out mechanisms, and HWH Air Leveling system.

In June 15, 2005 all Beaver production operations were relocated to the Coburg, Oregon facility when Monaco finally closed the Beaver Bend facility. The Santiam assembly was moved to Indiana (where they used the equivalent Monaco chassis) and the Patriot/Marquis production moved to Coburg where they used the Monaco Roadmaster "S" chassis.

Monaco Roadmaster chassis (Beaver years 2003-2009)

Roadmaster: Monaco started building/using the Roadmaster chassis design for their motorhomes in early 2000. The Roadmaster lineup includes four chassis series; the R-Series; the RR-Series; the M-Series; and the S-Series. Each series may also include several variations of the basic chassis, depending on the number of air bags and shocks included, and the positioning of the radiator (either side or rear). The ‘4’, ‘8’ and the ‘10’ in the chassis name stands for the number of Airbags used. The 'S' and 'R' at the end of designation denotes the placement of the radiator; S=Side and R=Rear radiator. All Roadmaster chassis share several common features. First, each uses the company’s Cushion Air-Glide suspension system, which is said to deliver superior ride, effortless handling, and excellent roll stability. And each chassis’ fuel tank can be filled from either side of the motorhome.

RSR, R4FE, F4F “Straight Frame Rail, Leaf Spring Suspension”: Used for HR Rambler, Vacationer, Monaco LaPalma. Not used for Beavers

R4R “Straight Frame Rail”, Four Air bag suspension.

- ✓ **2003 Baron** (ISB 5.9, ISC 8.3), Monaco Cayman, HR Neptune

RR4R: “Raised Rail”, Four Air bag suspension. Not used for Beavers

RR8R: “Raised Rail”, Eight Air bag suspension.

- ✓ **2003-2005 Santiam** (Cummins ISC 330, 350 or Cat C9).
- ✓ **2009 Contessa** (Cummins ISC 8.3)

RR8S / RR10S:

- ✓ **2007-2009 Contessa** (ISL400 or Cat C9),
- ✓ **2009 Monterey** (Cummins ISC 360 or cat C9)

M-Series (M8)*: Rear radiator (this is the SMC Magnum B-series chassis)

- ✓ **2003 Monterey** (Cummins ISC 330, 350).

M-Series (M10S)*: Side Radiator (this is the SMC Magnum D-series chassis)

- ✓ **2003-2005 Marquis** (Cat C12/C13)
- ✓ **2003-2005 Patriot** (Cat C9, ISL 400)/ Patriot Thunder (Cat C12, C13),
- ✓ **2004-2006 Monterey** (Cat C9)
- ✓ **2003 Contessa** (ISL 370)

S-Series:

- ✓ **2006-2009 Marquis** (Cat C13, C15 or DD 60 series),
- ✓ **2006-2009 Patriot Thunder** (Cat C9 or C13)

The S-Series is the welded and steel framed "semi monocoque". This chassis used welded steel framing in the main coach sidewalls and roof, welded to the main frame.

Roadmaster Chassis model/attributes:

R-Series (Beaver years 2003):

The R-series (RSR and R4R) is a "straight" rail frame design, using ¼" thick frame It had a rear radiator, and was available with either leaf-spring or air bag suspension.

The R4R has a four air bag suspension (one air bag per wheel). The only Beaver that used this chassis is the 2003 Baron. Power plants included the Cummins ISB (300 hp, 600ft-lbs @ 1600) with the Allison 2000, and the ISC (315 hp, 950ft-lbs @ 1300) with the Allison 3000. GVWR is between 24,000 (34ft models) and 26,000 pounds (36 to 38ft models) with wheelbases ranging 188 to 252 inches.

The RSR Chassis is leaf-spring suspension. It was used for the Monaco Cayman and HR Neptune models and uses air-over hydraulic brakes with an air-applied driveshaft mounted parking brake. No Beavers were built on this chassis.

RR-Series (Beaver years 2003-2009):

The RR series (RR4R, RR8R, RR8S, RR10S) is a “raised rail” frame for increased storage. This design uses aluminum framing (rather than steel as the S-series) for the house shell, which is then bolted to the chassis frame rails, instead of being welded (like the S-series). The RR-series was developed as a way to reduce manufacturing costs over the “expensive to build” S-series chassis. This aluminum-cage-bolted design resulted in a less ridged structure than the S-series, so to accommodate the reduced rigidity, the main frame rail webs were increased from 8” x 3” x 1/4” (of the S-series) to 8-5/16” x 3-1/2” x 3/8”. The wide frame spacing of the S-series remained the same at 44 inches. This design is known as the RR8 or RR10 (for 8 air bag or 10 air bag). It was offered in both the “S” and “R” configurations (Side and Rear radiator configurations).

All RR-Series chassis include full air brakes (all drum on the Santiam, and front disc with rear drum brakes on the Contessa) with ABS/ ATC (Antilock Braking System and Automatic Traction Control) and a Pacbrake exhaust brake or a Jacobs engine brake depending on engine size. These chassis also are equipped with automatic traction control and either a 90, 100-gallon or 130-gallon fuel tank.

Wheelbase lengths range from 204 inches to 270 inches, and all but the RR8S chassis boast GVWRs of 34,600 (36-40 ft Contessa) and 36,000 (40 ft Monterey). Within the RR8S chassis, the Monterey has a 36,000-pound GVWR; the Contessa has a GVWR of 34,600 pounds. The RR10S chassis is rated for a GVWR of 44,600 pounds.

M-series (2003-2006):

The M-Series was used exclusively for the Beaver Contessa, Monterey, Patriot, and Marquis from 2003-2006. The Roadmaster M-Series chassis was a renamed the "SMC Magnum" chassis. The Roadmaster M8-series is the SMC Magnum C-series chassis (8 air bag), and the Roadmaster M10-series is the SMC D-series chassis (10 air bag with Tag Axle).

Production of these chassis were done at the Harrisburg plant (SMC Magnum facility location) and then the chassis were shipped (Beaver) Bend OR facility for final assembly. The Roadmaster M-series was only used for three years until Monaco could transition completely to their RR and S-series chassis. The M10 chassis uses an aluminum-framed shell/cage, 10-1/4" frame rails high-yield steel with 16" on-center cross members. The M8 chassis has a 9 inch high C-fame.

The M-Series includes the M8R (2003-2004 Monterey), the M8S (2005-2006 Monterey and shorter 37-ft Patriot), and the M10S (Marquis and 40/42 foot Patriot/Patriot Thunder). 2003 was the first year for a "Tag Axle" in the Patriot.

Power plants used in this series include the 350-horsepower Cummins ISC engine (1,050 pound-feet torque at 1,400 rpm), or the 370-horsepower Cummins ISL engine (1,200 pound-feet torque at 1,300 rpm), and the Caterpillar C9 (standard with 350 HP or the optional 400 HP with 1,100 pound-feet torque @2,100 rpm). Each are equipped with an Allison 3000 MH transmission. The Marquis and Patriot Thunder employs the 505-horsepower Caterpillar C-12 engine (1,550 pound-feet torque at 1,200 rpm) with an Allison 4000 MH transmission (and after 2004, the C13 (525 hp, 1650 ft-lbs @1200).

All M-Series chassis are equipped with full air brakes (all drum on the Monterey and 2003 Patriot Thunder; and full disc on the 2004-2005 Patriot Thunder and Marquis (the Patriot Tag axle is drum) with ABS and ATC. The Monterey uses a

Pacbrake exhaust brake, while braking assistance for the Patriot Thunder and Marquis is provided by a Jacobs engine compression brake.

Wheelbase lengths range from 238 inches to 310 inches (45-ft Marquis). The Monterey and Contessa have a 32,800-pound GVWR and the 37-ft Patriot has a 36,300 GVWR with a 109-gallon fuel tank. The larger Patriot Thunder and Marquis have GVWR's from 46,300 to 50,160 pounds. Both the Patriot and Marquis have 148-gallon fuel tanks; the Contessa has a 99-gallon tank and the Monterey has a 109-gallon tank.

After 2005 the Roadmaster M-Series name was discontinued, and all the Beaver models were transitioned to the either the standard Roadmaster RR-Series, or to the top-of-the-line S-Series chassis, depending on the model.

S-Series:

The S-Series chassis is used for the top-of-the-line motorhomes built by Monaco, Holiday Rambler, and Safari. This group includes Monaco's Signature Series, Executive, and Dynasty coaches; the Holiday Rambler Navigator; and the Safari Panther; and (after 2005) the Beaver Marquis and Patriot. The S-series chassis uses a fully welded-steel frame chassis design which is known as the S-Series.

It is often incorrectly referred to as a monocoque chassis, but it is actually a "semi-monocoque" design. The term "monocoque" refers to a construction technique that supports structural load using an object's external skin (as opposed to using an internal framework or truss design that is then covered by a non-load bearing skin).

The Roadmaster S-Series is a "Semi" Monocoque chassis because only the top part of the chassis is built using a monocoque design which is then welded to the base chassis which uses internal frame rails with cross trusses, and because even in the top section Monaco uses some bracing trusses.

This semi-monocoque design uses full length frame rails, but of a smaller cross section than used with the Raised Rail frame chassis, and all the framing is welded both together and to the chassis rails. The "house" framing is steel and is also welded together and then to the chassis giving it a "unibody" effect and making it much stronger than an aluminum non-semi-monocoque house chassis that is only bolted to the frame. This results in a very stiff, very strong coach. This chassis type was also used by Country Coach, Foretravel and Newell.

Marquis and Patriot S-series chassis (Monaco Beaver years 2006-2009):

For Beavers, the S-series chassis was used for the 2006-2009 Marquis and Patriot Thunder are built on and are powered by the Caterpillar C13 (525 HP, 1650 lb-ft @1200) or the optional (for Marquis only) Caterpillar C15 (600 hp, 1850 lb-ft @ 1200) engines respectively. All feed their power through Allison's 4000 MH six-speed transmission.

For braking power, the Marquis, and Patriot Thunder uses air disc brakes with ABS and ATC all around. The tag axle is equipped with ABS as well. All use a Jacobs engine compression brake for additional stopping power, and an automatic traction control system. Wheelbase lengths vary with each model and range from 242 inches to 284 inches. The fuel tank used on the Patriot chassis have a 148-gallon tank and Marquis have a 150-gallon capacity.

From the early 2000s until Monaco Coach Corp ended production in early '09, the S-Series chassis coaches and the various RR chassis were built concurrently. When Navistar bought the assets of MCC, they finished those coaches in production and used up the lots of chassis inventory they inherited. When they started introducing coaches designed during their ownership, no new S-Series chassis were built.

Roadmaster and Magnum Chassis - Common Features:

Roadmaster and Magnum chassis have the same cramp (steering) angle, around 45-50 degrees, depending upon whether making a left or right turn. Magnum chassis uses an 8 or 10 (10 with tag) outboard airbag layout like Roadmaster chassis.

The Roadmaster and Magnum uses two shocks per wheel, (just as they use two airbags per wheel). Roadmaster is available in semi-monocoque (S) and Raised Rail chassis (RR), all Magnum chassis are Raised Rail (RR) chassis. Roadmaster does make entry level Straight Rail chassis (R4R).

All the Magnum chassis have "I-Beam" steel for the H-Frames

The Roadmaster RR chassis use 2" x 5" rectangular tubing for the H-Frames

Outboard-Mounted Air Bags

Outboard-mounted air bags are placed approximately 7-1/2 feet apart on most models, providing a wider and more stable platform for your coach. The active suspension automatically adjusts the pressure of the air bags as you drive and virtually eliminates nose-diving and the side-to-side body sway associated with high wind conditions, curvy roads and emergency maneuvers.

<u>Frame size comparison (H x W x Thickness):</u>
Gillig = 8” x 3 ½ “ x ¼”
Magnum (all except D-series) = 9” x W x T
Magnum D-series = 10 ¼” x W x T
Roadmaster S-series = 8” x 3” x ¼”
Roadmaster RR series = 8 $^{5}/_{16}$ “ x 3 ½ “ x ¼ “

PART 2: Additional Information

Section 1: Coach Manufacturer background/history

Section 2: Other Brands Chassis

Section 3: Roadmaster Chassis nomenclature (2001-2003)

Section 5: Known Issues

Section 6: Recall links

Section 7: Suspension Types/Info

Section 8: VIN Decoders (for Gillig, Spartan, Magnum, Roadmaster)

Section 9: Manufacture's model lineup, hierarchy, chassis by model

---

Section 1:
Coach Manufacturer's Background

Beaver Coaches background:

Beaver Coaches Inc, was founded in the late 1960s by Jim Hogue and Frank Storch. The company was named after the Oregon State University mascot. The firm originally built slide-in campers for pickup trucks.

In the mid-1970s, the company opened a motor coach facility in Bend OR and began building Class C motor homes, commonly called "minis". The motor homes were built on a Chevrolet and Dodge chassis with either a Chevrolet 454 or Dodge 440 engine and ranged from 21 feet to 23 feet in length. During this period, all the Beaver Coach models used a brown and white color scheme.

In the early 1980s, the company expanded to building Class A motor homes with gas engines. They also introduced a new color pattern that featured red, green, and blue rainbow designs. These early Class A motorhomes ranged in size from 22 feet up to 36 feet in length.

In 1983 the first model exceeding 32 feet was introduced and came equipped with a Tag Axle. This tag axle (manufactured by Mor-Ryde) was provided by the chassis manufacture (Chevy on

a P-30 chassis) but was only available on the “front mounted” gasoline engine models that ranged from 30 ft to 36 ft. The rear mounted gas engine (a 427 c.i.d. Chevy) and the rear mounted diesel engine (8.2L Detroit) coaches did not get a tag axle. After 1988 the Chevy chassis were discontinued, and all coach models were built on the Gillig chassis. No tag axles coaches were produced again until 2000.

In 1984 the company introduced its first true diesel-pusher motor home. Built on a purchased Gillig chassis, these diesel powered coaches had a Detroit Diesel or Caterpillar engine with an Allison automatic transmission, floor plans up to 40 feet in length, and Gross Vehicle Weight Ratings up to 31,000 lbs.

Beaver sales grew steadily through the 1980’s. In their best year, annual production reached between 400 to 500 coaches.

Beaver built a reputation for having the nicest cabinets and woodwork in the industry. The beautiful woodwork, level of detail, and the rich woods are said to be what made Beaver Coach famous. The cabinets were handcrafted by experienced craftsman from superior woods (solid Oak, Walnut, and Cherry, with Burl wood Inlays) that gave them a look reminiscent of grand estates and fine hotels.

In 1990 Beaver entered the Bus Conversion market with the “Beaver Coach” built on a Prevost Le Mirage chassis. This 40 foot motorcoach had a GVWR of 42,000 lbs. and a starting retail price of $463,190 which could top $500,000 with options. Beaver sold 34 during its production run from 1990 to 1992.

Unfortunately, due to the economic recession and oil crisis of 1990-91 and the subsequent reduction in motorcoach sales, Beaver began to experience financial difficulties. By the end of December 1990 Beaver had cut production by 30% and began to furlough employees. Beaver president John Oliveria said the reduction was necessary to “balance a sales reduction over the past several months” and the shutdown was a “temporary trimming of our production”. However, things didn’t get better over the next two years.

In November 1993 the company's debt exceeded $11.36M and Beaver was forced to file for bankruptcy protection. The U.S. Bankruptcy court assigned Safari Motorcoach Corp. (SMC) of Harrisburg, Oregon to manage Beaver Coaches during the process, who eventually took ownership of Beaver through a bidding process.

Safari Motorcoach Corporation (SMC) background:

Safari Motorcoach Corporation (SMC) and the Trek line of motorhomes was the brainchild of Mat Perlot, the former marketing manager for Beaver Motorcoach Corporation. When Beaver Coach decided to pass on creating a Class A motorhome with a $80,000 to $120,000 price point, Mat Perlot along with Curt Lawler, also a Beaver Coach employee, left to create Safari Motorcoach Corporation. SMC was incorporated in Eugene Oregon in 1986.

Safari production operations began in 1987. The initial product included coaches ranging from 30 to 34 feet and retailed for about $100,000. Over the next several years SMC expanded its product offerings to both higher and lower price points, to include coaches ranging in length from 24 to 45 feet, and with retail prices ranging from $128,000 to $757,000.

In 1991 the “small to moderate size” Trek Class-A motorhome was introduced. The popular Trek brand ran from 1991 to 2001. The length ranged from 24 to 28 feet and was initially built on an Isuzu NPR chassis (3.9L diesel) and later built on the GM P30 and P32 chassis (with 454 gas or 6.5L diesel engine).

In 1993 SMC expanded by opening their own chassis plant, the “Magnum Chassis Company”. Previously SMC was buying their chassis from outsourced suppliers (Spartan and Gillig) and decided that by manufacturing the chassis inhouse, they could provide a higher quality, better ride, and achieve cost advantages over those competitors that do not build their own chassis.

In 1994, the first Magnum chassis went into production, called the B-series chassis (“Magnum Air”) for the 1995 Patriot redesign. Within a year, Magnum Chassis began designing and manufacturing the chassis for seven of the eight model lines of Safari and all the Beaver products, with the Safari Trek being the only model not using the Magnum chassis.

In 1994 SMC opened their own fiberglass plant, Composite Technologies Inc. (CTI) and created their electrical/electronics subsidiary, Electronic Design & Assembly Inc. (ED&A) Inc., which were located in Burns and Bend Oregon, respectively. SMC made daily truck runs to ship the fiberglass body components to their assembly facility in Harrisburg, about 130 miles away.

Safari acquired the Beaver Coaches Inc. in 1994 after its bankruptcy, and renamed it to “Beaver Motor Coaches, Inc.”. SMC then positioned the (Beaver) Marquis as its flagship product and continued manufacturing it at the Bend, Oregon (the original Beaver) facility.

By 1995 SMC had over 1,100 employees and annual sales over $50 million. SMC had five subsidiaries (Safari Motor Coaches, Magnum Manufacturing, Beaver Motor Coaches, Electronic Design & Assembly, and Composite Technologies). In 1996 SMC bought Honorbuilt (El Dorado a Class-C, which failed) and further diversified with another Class-C line under Harney Coach Works, but it was said that “it was the wrong product at the wrong time”. In 1997 SMC introduced their first “slide out” room.

In 1997 when Gillig decided to cease production of their motor home chassis to focus on their school bus industry, SMC acquired the rights from them to manufacture the chassis. Safari’s new Magnum Chassis division then worked on developing a new chassis for the Marquis. Previously, the Marquis was constructed on a purchased Gillig brand chassis. After making some modifications specific for the Marquis (such using the “Magnum Air Suspension”) the new chassis (which was named the “Blue Diamond”) went into production in 1998.

In 2000 SMC tried to enter the Bus Conversion market (e.g. Prevost-Newell-MCI) and built the Solitaire, a 45-foot Tag Axle coach with one and a half baths and all the amenities, with an initial retail price range from $729,000 to $757,000 (14 were built).

In 2000 SMC-Beaver introduced their first air-bag/liftable Tag Axle with the custom built 45-foot Solitaire, and then added the Tag Axle to the 42-foot Marquis which was built on the new Magnum D-series Blue Diamond chassis. These Tag Axles were rated for 14,600 lbs. and 10,800 lbs. respectively. In 2003 the Tag Axle was added to the shorter 40-foot Marquis and the 40-foot Patriot Thunder. After 2003, all 40 foot and larger coaches came equipped with a Tag Axle.

SMC’s (too) rapid expansion, purchase of Beaver, startup of their chassis, fiberglass, and electronics facilities, and diversification into Class C motorhomes, resulted in cash flow problems and increasing debt. By 2001 SMC’s stocks plunged from $12 a share to $3.68 a share. On June 25, 2001 Monaco Coach Corporation announced that it has agreed with SMC

Corporation to acquire all of the outstanding shares of SMC pursuant to a cash tender offer at a price of $3.70 per share.

In 2002, Monaco Coach completed the purchase of the Safari and Beaver brand names and assets. Monaco kept the Safari Harrisburg plant open, and the Beaver Bend Oregon assembly plant where it continued to operate that plant until the end of 2005 at which time all Beaver productions moved to Coburg Oregon.

Monaco background:

Monaco's founding father, Ray Mehaffey, began the company in 1968 as the Caribou Manufacturing Company. They began building pickup campers. In 1974 Caribou ownership went to Mayor Brian Obie of Coburg, Oregon, and he moved their Junction City operations to the Coburg Industrial Park in Eugene, Oregon. The most popular line was named "Monaco". In 1977 the company name was changed to "Monaco Coach Corporation".

In 1984 Monaco bought Roadmaster Chassis from Chrysler Corp. Roadmaster was a chassis division that Chrysler opened mid-1980s to design a chassis for a commercial bus/coach that they planned to build. They changed their plan and sold off the division including the chassis to Monaco. Monaco used the Roadmaster chassis line for the Beavers until the end of production in 2009.

Monaco manufactured seven brands of motorhomes and RVs, including Monaco, Beaver Motorcoach Corporation, Safari Motorcoach Corporation, McKenzie, Holiday Rambler, R-Vision.

Monaco operates manufacturing facilities in Oregon and Indiana and distributes its RVs through 700 dealers in North America. Sales reached $1.32 billion in 2006 and $1.29 billion in 2007.

The credit crisis from the bursting of the housing bubble in 2007–2008 and following recession, resulted in a large drop in demand for RVs. By November 30, 2008, Monaco's sales had dropped to $690 million. The credit crisis and drop in RV sales resulted in Monaco having to repurchase RVs sold to its Dealers (the RV industry commonly uses "floor plan" financing where third party lenders finance the dealer's purchase of RVs from manufacturers. Floor plan loan agreements often require RV manufacturers to agree to repurchase RVs that remain unsold if the dealer defaults on the loan). Monaco had re-purchase agreements with many of the floor plan lenders who loan to Monaco's dealers. Ableco Finance LLC claims that it has a term loan

with Debtors for approximately $36.9 million. Monaco's accounts receivables at that time totaled $6.7 million immediately prior to filing for bankruptcy.

On March 5, 2009 Monaco filed for Chapter 11 bankruptcy.

Navistar (Monaco RV LLC):

Navistar International Corporation is a holding company whose wholly owned subsidiaries produce International brand commercial and military trucks, MaxxForce brand diesel engines, IC Bus brand school and commercial buses, and Workhorse brand chassis for motor homes and step vans. In June 2009 Navistar International Corporation announced that an affiliate has completed the purchase of certain assets of the recreational vehicle (RV) manufacturing business of Monaco Coach Corporation. Purchase price is approximately $47 million. Navistar International Corp purchased the core assets of Monaco Coach Corporation's factories, inventory, and brands (but did Not purchase the "Beaver" or "Safari" brand names).

No Beavers were produced after Navistar acquired Monaco in 2009.

"Navistar's entry into the RV business through the purchase of certain Monaco Coach assets fits our strategy of leveraging our assets to expand our diesel business, serve the end customer through robust parts and service, and will complement our Workhorse chassis business," said Jack Allen, president of Navistar's North American truck group. "The Monaco brand is a market leader with a strong reputation and Navistar is pleased to add it to our portfolio of leading brands and businesses.

The company's new name became "Monaco RV LLC". In 2013 as part of Navistar International Corp. restructuring, Monaco RV LLC was sold to Allied Specialty Vehicles.

Allied Specialty Vehicles (REV Group):

Allied Specialty Vehicles (ASV) was formed in 2010 from the merger of four companies owned by American Industrial Partners: Collins Industries, E-One, Halcore Group, and Fleetwood RV. Its headquarters is in Orlando, FL.

In 2013, ASV purchased the RV assets of Navistar International, which include Monaco, Holiday Rambler, and R-Vision brands. Note that REV did not acquire the Roadmaster chassis division so all new coaches are built in purchased chassis (Spartan, Freightliner, etc.).

Allied Recreation Group manufacturers products for Fleetwood RV, American Coach, Holiday Rambler, Monaco, and Trek brands. Allied Specialty Vehicles changed its name to “REV Group” in November 2015. REV has 18 manufacturing facilities, 29 vehicle brands and approximately 7,400 employees across the United States. The company produces more than 20,000 vehicles annually, including ambulances, fire apparatuses, commercial buses, yard trucks, street sweepers, wheelchair accessible vans and luxury motor coaches.

In 2016 REV partnered with Freightliner Custom Chassis, a Daimler company and the parent company to Mercedes-Benz, to build its own exclusive Freightliner motorhome chassis, named the “B-Series (“Bridge”) Roadmaster chassis”. Which features a ZF independent front air suspension system and a steerable tag axle.

Beaver Coach Sales (BCS):

In 2016 the “Beaver” brand name and rights-to-build were purchased by Ty Kelly owner of Beaver Coach Sales and Service located on the grounds of the original Beaver Factory in Bend OR. Ty Kelly, the owner of Beaver Coach Sales, stated that he planned to begin production of Beaver Coaches again (in 2018) – however it was reported on the Beaver Ambassadors Club forum in April 2019 (per member’s conversation with Ty Kelly in 2019) that those plans are no long being pursued.

Section 2:

Other brands Class-A Diesel Pusher Chassis:

(Data from 2004. Not be accurate for Coach chassis after 2004)

Blue Bird Corporation: Blue Bird, C4, is one of the companies that builds chassis specifically for its own motorhomes. The chassis used for Blue Bird’s 38-foot Wanderlodge M380 has a 248-inch wheelbase. Yet, even with a coach of this length, the chassis’ 54-degree turning angle allows drivers a comfortable curb turning radius of 29.7 feet and a wall turning radius of 35 feet.

The Blue Bird chassis is equipped with an ArvinMeritor suspension that includes an independent front suspension with two air bags and a rear system that utilizes four outboard air bags. Gabriel direct-acting, double-action, piston-type shock absorbers soften the ride on all

four corners. The chassis is equipped with Meritor disc brakes on all four corners with a Bendix four-channel antilock braking system (ABS).

Dynomax: A proprietary chassis of Country Coach began in 1998 after Gillig left the RV market. This chassis is a semi-monocoque, with all-welded all-steel construction, including suspension mounting and adjustment, and has IFS. It is a premium chassis with excellent ride & handling. The DynoMax chassis is equipped with a dual-circuit pneumatic braking system, with both antilock and automatic traction control systems. The chassis features air springs at each wheel, which work with the chassis' leveling system. In addition, a large ipd antisway bar minimizes side-to-side rolling while allowing the independent front suspension to travel freely.

Fleetwood American Coach: The "Liberty" chassis is a new foundation that is being used for all of Fleetwood's 2004-model American Coach motorhomes. Fleetwood, C985, does not offer its chassis to other motorhome builders.

The Liberty uses a bridge-type frame that is said to provide the torsional strength needed to accommodate the weight and wall penetrations required for motorhomes with two, three, and four slideouts. Welded tubular steel members create the bridge portion of the chassis, while a process called Huck-bolting is used to attach the bridge to the rear frame rails that hold the engine, transmission, and the rear axle and its suspension components. Huck-bolting also is used to attach the front rails where the steering gear and the front axle and its suspension are connected. To fight corrosion, a military-spec electro-coating process is applied to the Liberty chassis frame.

Freightliner: Freightliner got into the RV business in the mid-90's when it purchased Oshkosh. A very popular chassis in the entry level to mid-range DP's. It tends to ride softly and wallow more than the other chassis in its price class.

The Freightliner, C1905, offers the XC Series diesel-pusher chassis for motorhome applications, which is available with several engine and transmission combinations. The XC Series frame is constructed using a combination straight and raised-rail design and carries either a 90-gallon, 100-gallon, or 150-gallon fuel tank that can be filled from either side of the motorhome. Neway air suspensions support the front and rear of the chassis, which also incorporates custom-tuned Sachs shocks. The XC chassis is equipped with air brakes (drum) and ABS. Steering is hydraulically assisted with a 20.4:1 ratio and a 50-degree cut angle. The new optional ZF

independent front suspension features air disc brakes with ABS and a 56-degree wheel cut angle.

Gillig: A popular chassis for expensive, high-end DPs (Beaver, Country Coach & Foretravel) until 1997 when they left the RV market to focus on their school busses. The Gillig chassis consists of 8-inch-by-3 1/2 -inch by 1/4 inch double flanged "U" channel steel and full-depth huck-bolted cross members and was available in a straight frame or a stacked frame configuration. The chassis is constructed of two main frame rails which are connected by several cross members. Outriggers are attached to the frame rails for mounting the radiator, sidewalls, floor, and driving platform. The cross members and outriggers, as well as the suspension mounting brackets, are attached to the frame rails by Huck bolts.

Magnum: A proprietary chassis brand of Safari Motorcoach Corporation (SMC). Starting with the Safari line in the mid-90's and migrating up the Beaver line in the late 90's. A wide variety of innovative chassis ranging from lower-middle level to the very high-end Prevost wannabe Beaver Solitaire. The higher end Magnum chassis used on the Beaver Patriots, Marquis & Solitaire were equipped with 8-bag like the Monaco (10 with Tag Axles), but with larger air bags for a better ride.

Newell: uses a proprietary chassis semi-monocoque chassis for its very high end Newell DP's. Although continuously updated through the years, today's Newell chassis incorporates the main features of the then-radical design created more than 30 years ago by Mr. Newell. To maximize underfloor storage, Newell created a chassis that utilized a bird-cage or bridge-type structure rather than conventional bulky frame rails. In addition to "opening up" the basement for storage, the structure achieved another goal of Mr. Newell's: the chassis was self-supporting, not relying on the body sidewalls for strength. Little did Mr. Newell realize that, 25 years later, his innovative approach would continue to provide Newell motorhomes with an exceptionally rigid chassis that allows for up to four slideouts. The Newell chassis rides on a ZF independent front suspension with air springs and wide-base air bags on the rear axle. The active steering system on the tag axle reduces the turning circle of the 45-foot chassis by approximately 15 feet compared to a chassis using a more conventional tag axle design. Air disc brakes with ABS are used all around, with a Jacobs engine compression brake for extra slowing power.

Peak: A proprietary chassis for Alpine. The Peak Chassis was created more than six years ago [*1998*] when Western RV entered the diesel-pusher type A motorhome market with its Alpine

Coach Limited models. It used a relatively new design Huck-bolted raised-rail chassis with rugged features similar to the old Gilligs. It has heavy-duty 4 wheel hydraulic disc brakes. The Peak Chassis starts as a raised-rail ladder-type frame with layers of polyurethane enamel primer and overcoat paint for protection against the elements. Powder-coated brackets and grade 8 bolts are used throughout.

Touted as a high quality mid-range coach that appears to have hit its target. Its sole purpose was to design and manufacture a coach chassis for this particular motorhome. At FMCA's 2003 summer international convention in Buffalo, New York, Western RV introduced a second type A diesel-pusher, the less expensive Alpine Coach Avalanche Series.

The Peak Chassis used for each motorhome is basically the same. Most of the differences occur in the standards/options list on the finished coaches rather than the chassis. However, there are several variations that should be noted. The chassis used on the Avalanche Series includes a rear-mounted radiator (the Alpine Coach Limited has a side-mount radiator); steel wheels (the Alpine Coach Limited has aluminum wheels); and full air brakes with ABS and traction control (the Alpine Coach Limited has hydraulic disc brakes with ABS and traction control, with air brakes as a deduct-cost option).

Roadmaster: Roadmaster is the proprietary chassis brand of Monaco Coach, which was purchased from Chrysler Corp in 1984. Roadmaster makes the widest variety of chassis from entry-level through high-end semi-monocoque DP's. Currently, its lineup includes four chassis series: the R-Series; the RR-Series; the M-Series; and the S-Series. Each series may also include several variations of the basic chassis, depending on the number of air bags and shocks included, and the positioning of the radiator (either side or rear).

The entry level RSR & RR4R chassis are similar to their entry-level competitors--nothing wrong with them but nothing remarkable. Their mid-range & up chassis are known for their 8 air bag suspension (10 with tag axles). The widely spaced, but small air bags provide crispest handling as well as the firmest ride of any DP I've driven.

All Roadmaster chassis share several common features. First, each uses the company's Cushion Air-Glide suspension system, which is said to deliver superior ride, effortless handling, and excellent roll stability. And each chassis' fuel tank can be filled from either side of the motorhome.

Spartan: A specialist chassis builder that makes MH & fire engine chassis exclusively. Spartan is said to have very good customer support. While they do make an economy chassis, they are more known for their high quality components in the mid-range to high-end DP's. Spartan Chassis Inc., C3322, entered the type A diesel-pusher chassis market in 1985.

Spartan currently offers four different chassis to motorhome builders: the NVS/NVSGT, Mountain Master, K2, and Me2.

All 2004 Mountain Master GT models ride on Spartan's independent front suspension system, a Reyco rear air suspension, with Bilstein shocks all around. The chassis has a steering cut angle of 55 degrees on a 14,600-pound-rated front axle, includes a front sway bar, and is equipped with full air brakes with ABS.

Spartan's K2 chassis is built on a stacked-rail frame. Wheelbase lengths available on the K2 range from 276 inches to 320 inches. The K2's GVWR is 34,600 pounds and its GCWR is 49,600 pounds. An available tag axle boosts the GVWR to 44,600 pounds and the GCWR to 59,600 pounds..

The Spartan Me2 chassis shifts the engine and transmission, "the heaviest assembly in the chassis", to the center of the frame, thus distributing the weight more evenly on the front and rear axles. This, in turn, improves the coach's performance by providing a more stable ride and reduced sway. The powertrain placement also allows the motorhome manufacturer more flexibility when designing the coach portion of the vehicle, with options as varied as a sunken bedroom with a whirlpool tub; a rear garage for a small car, motorcycle, or golf cart; a traveling office, etc.

The company's patented Spartan Active Ride system is available as an option on the Mountain Master and K2 chassis. Using a combination of hydraulics, electronic sensors, and computer controls, the system is said to provide a tight, level, and smooth ride for motorhomes. Spartan Active Ride gathers input from the four corners of the coach; integrates data on driving conditions, braking, speed, roll acceleration, and steering angle; and then adjusts each wheel end to smooth out the ride.

TravelRide: Foretravel's proprietary semi-monocoque chassis that came after Gillig. Another 8-bag premium chassis with excellent ride & handling characteristics. Foretravel manufactures

two chassis that it uses on its production motorhomes. One chassis is used for U270 and U295 models, and the other is used on the U320 model. Although they are different, each has many similar features.

Those similarities include dual fuel fills (one on each side) for the 180-gallon fuel tank; a Firestone air bag suspension system (eight air bags on the U270 and U295 models; 10 air bags on the U320 model, which is equipped with a tag axle); and all-wheel air disc brakes with ABS.

Now we'll get into the differences. The platform used for the U270/U295 models is powered by the 400-horsepower Cummins ISL (1,200 pound-feet torque at 1,300 rpm), which is mated to an Allison 3000 MH transmission. The chassis has a 35,320-pound GVWR and a 45,320-pound GCWR and is available with wheelbase lengths of 204 inches, 228 inches, 252 inches, and 276 inches.

The U320 model is equipped with a Cummins ISM 450-horsepower engine (1,450 pound-feet torque at 1,200 rpm) with an Allison 4000 MH transmission. Later model-year coaches may be outfitted with a Cummins 500-horsepower engine. It has weight ratings of 42,000 pounds GVWR and 52,000 pounds GCWR. This chassis, which includes a tag axle, is available in wheelbase lengths of 278 inches, 302 inches, and 326 inches.

Workhorse Custom Chassis: Workhorse Custom Chassis, C8291, known primarily for its gas-powered type A motorhome chassis, joined the type A diesel-pusher market in 2002 with the R Series chassis. The R Series chassis is built with either a straight-rail or raised-rail frame and comes in six wheelbase lengths: 208, 228, 242, 252, 262, and 276 inches. The R Series chassis is available in three weight ratings. Standard is a 28,000-pound GVWR with a 40,000-pound GCWR; the optional packages are a 29,000-pound GVWR with a 41,500-pound GCWR or a 32,000-pound GVWR with a 44,000-pound GCWR. Fuel capacity is 100 gallons (standard) or 150 gallons. The standard chassis has the fuel fill on the driver's side, but Workhorse also offers manufacturers the option of adding another fill on the passenger's side.

Section 3:

Roadmaster chassis naming conventions:

When Monaco bought SMC/Beaver in August 2001 they continued to make the Beavers in Bend Oregon at the Beaver plant for a couple years so there was a combination of Magnum and Roadmaster chassis being used at the same time. It was suspected that Monaco was utilizing old stock Magnum, and/or producing Chassis from both the Magnum plant, and the Roadmaster plant simultaneously until old stock was used up.

This led to some naming confusion since the Roadmaster “RM” chassis nomenclature was already being used to identify the chassis that Monaco was using with their Roadmaster in-house. To distinguish between Roadmaster chassis and the Magnum chassis during the transition, the SMC Magnum chassis were identified as the “Magnum” chassis or as “Roadmaster-Magnum”, and the Monaco Roadmaster chassis were identified as “RM” (RM for **R**oad**M**aster or possibly **R**oadmaster-**M**onaco). Designations like RM4C, RM8C, RM8H and RM10H, and MAGNUM were used up to 2002 in the Roadmaster nomenclature. The number 4, 8 or 10 was for the number of airbags used, and the “C” or “H” referred to “Cross flow” (Rear Radiator) or “Horizontal flow” (Side Radiator).

After 2002 Monaco dropped the RM and RR destinations and switched to the current nomenclature of using the letter prefix for identifying the chassis series: “**R**xy” for straight rail, “**RR**xy” for Raised Rail, “**S**xy” for S-Series, “**M**xy” for M-Series, etc. (where the “x” signifies the number of airbags and “y” the placement of the radiator.

The early “Roadmaster-Magnum” or “Roadmaster-Roadmaster” chassis can be identified by the name on the Roadmaster VIN plate. Note in the photo below the model name: R-3300; R for Roadmaster followed by the GVWR, and similary, M-3200; M for Magnum followed by the GVWR.

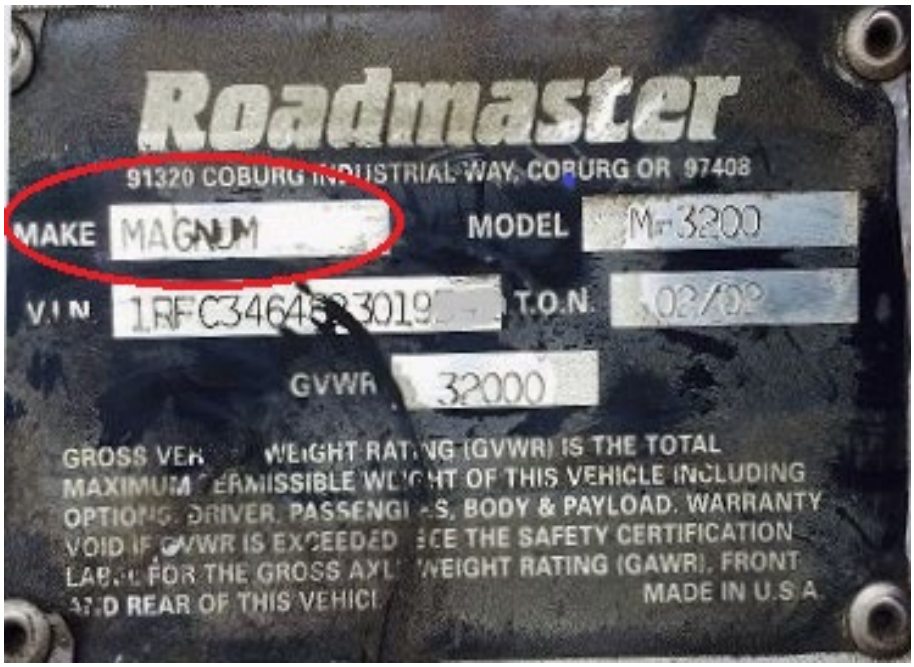
Roadmaster
91320 COBURG INDUSTRIAL WAY, COBURG OR 97408
MAKE
MAGNUM
MODEL
MR3200
V.I.N.
T.O.N.
GVWR
32000
GROSS VEHICLE WEIGHT RATING (GVWR) IS THE TOTAL
MAXIMUM PERMISSIBLE WEIGHT OF THIS VEHICLE INCLUDING
OPTIONS, DRIVER, PASSENGERS, BODY & PAYLOAD. WARRANTY
VOID IF GVWR IS EXCEEDED. SEE THE SAFETY CERTIFICATION
LABEL FOR THE GROSS AXLE WEIGHT RATING (GAWR), FRONT
AND REAR OF THIS VEHICLE.
MADE IN U.S.A.

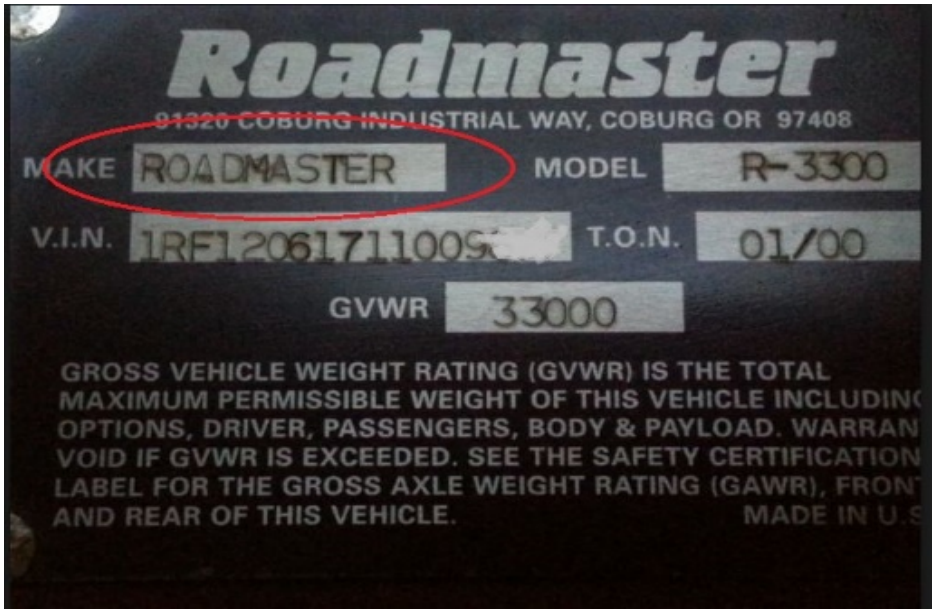
Roadmaster
91320 COBURG INDUSTRIAL WAY, COBURG OR 97408
MAKE
ROADMASTER
MODEL
R-3300
V.I.N.
T.O.N.
01/00
GVWR
33000
GROSS VEHICLE WEIGHT RATING (GVWR) IS THE TOTAL
MAXIMUM PERMISSIBLE WEIGHT OF THIS VEHICLE INCLUDING
OPTIONS, DRIVER, PASSENGERS, BODY & PAYLOAD. WARRAN
VOID IF GVWR IS EXCEEDED. SEE THE SAFETY CERTIFICATION
LABEL FOR THE GROSS AXLE WEIGHT RATING (GAWR), FRONT
AND REAR OF THIS VEHICLE.
MADE IN U.S

Section 4:

Known Issues: Frame-suspension cracking

R4R and RR4R Trailing Arm

The four air bag suspensions used on the smaller chassis Beavers, Safaris, Holiday Ramblers, and Monacos had problems with the rear tracking arms cracking. The spacer plate under the trailing arms had a transverse weld which created a heat riser and caused the trailing arm to crack. A recall was announced in 2002 (NHTSA campaign ID number 05v053000).

Model	Production Years
Monaco Knight	2002 - 2004
Monaco Cayman	2002 - 2009
Holiday Rambler Ambassador	2002 - 2004
Holiday Rambler Neptune	2002 - 2009
Safari Cheetah	2002 - 2004
Safari Simba RD	All Years

Top is Original Monaco Roadmaster Part
Bottom is Source Engineering replacement

Roadmaster RR10 Chassis: Vertical Support Post and X-Frame cracking

There are reports of the 3”x3” vertical support frames/posts and X-frame cracking on the rear of chassis (between rear axle and tag axle) in the 2003-2007 Monaco coach models using the RR10 chassis, which required additional gussets to be added to the frame. Monaco added these gussets on the 2008 and later models.

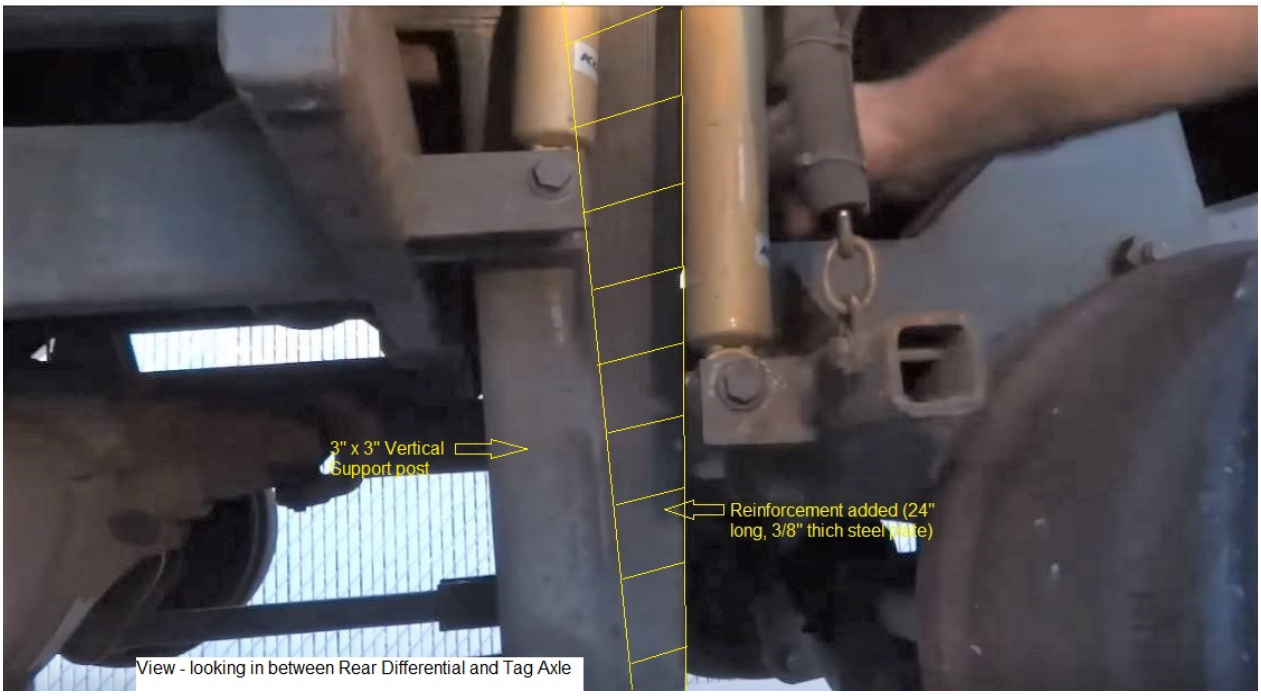
3" x 3" Vertical
Support post
Reinforcement added (24"
long, 3/8" thich steel plate)
View - looking in between Rear Differential and Tag Axle

This picture shows the crack starting just below the weld

On the drivers side rear vertical trailing arm strut

This pictures shows the progression of the crack around

Towards the rear of the strut

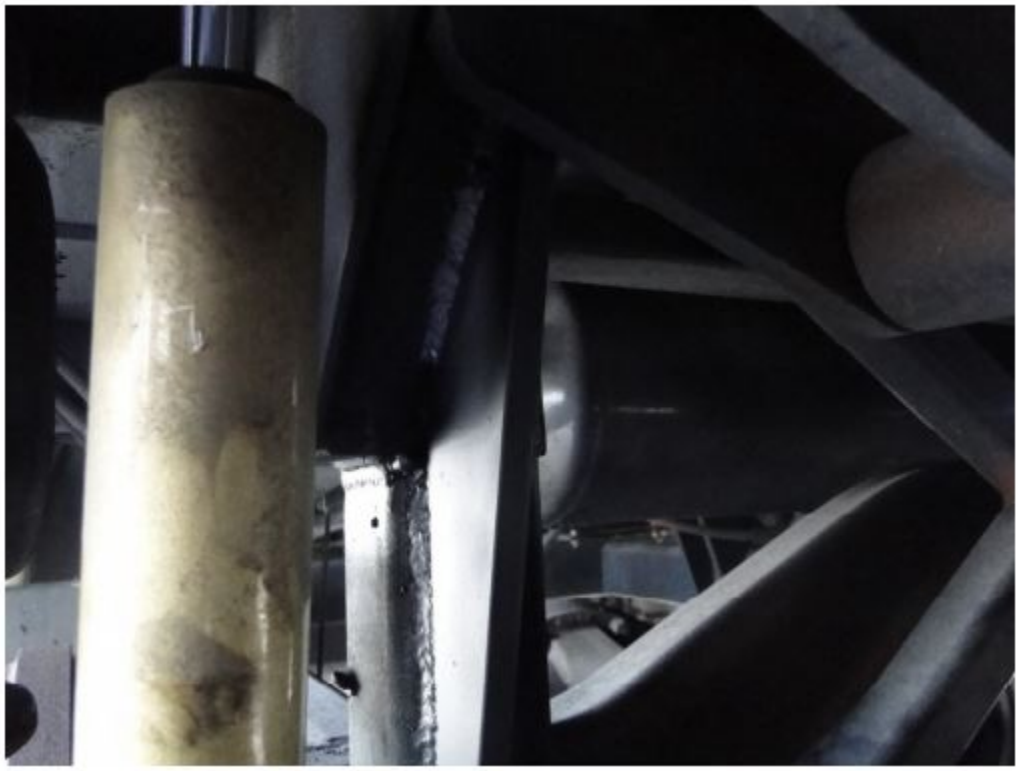

Gusset Plate added

Fiberglass Cracking (a.k.a. Thermal Checking or Crazing)

The issue was with coaches from about 2000 to 2008.

RVs of this era are prone to “thermal paint checking”, especially if it’s driven or kept in an area of excessive heat. Additionally, RVs that are painted black or dark brown tend to be especially susceptible to paint checking. Paint checking occurs when the sun’s radiating heat breaks down the gel coat resin of the fiberglass on the luan walls (Luan is a $^{1}/_{8}$” to ¼” thick tropical hardwood plywood).

The cracking is caused by extreme heat and the expansion that comes with it and the extreme contraction as it cools at night. Over time the cycle causes the gelcoat to break down and crack. Gelcoat is a polyester resin based product and the sidewall manufacturers used a low grade resin to produce the gelcoat for their walls because they knew the RV manufacturers were going to top coat the wall with paint and clear coat. The darker colors get extremely hot (excess of 200 degrees) in different regions of the country and the heat transfers so even the lighter colors adjacent to the dark colors will display some cracking over time.

The two main suppliers of fiberglass sidewalls to the RV industries of this era were Dow Corning and Crane Composites, and have both had their share of this problem. The only connection that paint color has is the darker the color the faster it will show up, however if it is showing on the dark color now it's just a matter of time until you will see it appear on the light colors also.

The problem is the result of a problem in the manufacturing process. EPA regulations around early 2000's required fiberglass manufacturers to reduce the VOC (Volatile Organic Compounds) during the manufacturing process. In order to conform to the regs, some manufacturers changed their process in a way that left more of these compounds in the fiberglass sheets they produced. Over time, as the sidewalls heat up, these "bubbles" leach out of the fiberglass through the paint, producing the checking. The problem is in the underlying fiberglass not the paint.

Windsor
MONACO

A fix requires that the paint and the glass surface be sanded off and re-painted, but the problem will most likely re-occur if more dark colors are applied and the rig is in the sun a lot. It may take a few years, but the underlying fiberglass composite will probably crackle again. A complete fix would require replacing the sidewalls with Crane's re-formulated composite material or a similar product. Either fix is hugely expensive. Some Fiberglass shops have said they can grind out the checks, re-fill the areas (Evercoat “Feather Fill G^2” is said to be one product that works), and repaint; while some may guarantee that area will not re-check they cannot guarantee that a check will not develop elsewhere, perhaps only a fraction of an inch away. So one is left with the alternative of doing the whole deal or just leaving it and living with it.

Around the mid 2000’s Crane Composites came out with a new wall called the C-Tech wall and the resins were much better and they got rid of the luan backing and went with coremat. All of these changes were better and helped, but we would still see signs of thermal cracking on motorhomes less than 2 years old. Even today I see cracking in sidewalls on newer RV’s built less than 5 years ago.

On June 29, 2008 National RV sued Crane, which is also known as Kemlite Co., saying the faulty material forced National RV to tear apart and completely rebuild at least 76

motorhomes, many of which had already been sold to dealers or customers. It accused Crane Composites, a subsidiary of Crane Co. based in Channahon, Ill., of breach of contract, breach of warranty and misrepresentation. It said the company knew about problems in its fiberglass production as far back as 2004 and had met with another manufacturer, Elkhart, Ind.-based Coachmen Industries Inc., about the situation. In February of 2009, Coachmen won the "liability portion" of their lawsuit against Crane Composites (formerly known as “Kemlite FRP”) over the defective material used in the laminated sidewall material. Per a press release at that time: “All of the counts alleged in the original complaint were found in favor of Coachmen. The remaining phase of the trial will determine the amount of damages payable on this liability judgment. In its complaint, Coachmen has asserted claims for warranty-related expenses in excess of $19 million and total potential claims of over $85 million.” In the end, Coachmen Industries settled with Crane/Kemlite for a payment of $11.7 million.

All major manufacturers switched to using an all composite fiberglass sidewall 2-3 years ago. You'll even find these new sidewalls in the most entry level coaches. This switch has appeared to solve the issue, as the composite layers making up the sidewalls have similar if not identical thermal expansion properties.

I believe Monaco and American Coach use “CTec” sidewalls made by Fabwell, now owned by Crane. These composite sidewalls also have added benefits, including better thermal insulation properties, are lighter weight, and stronger than their previous fiberglass/wood substrate sidewalls. They do tend to be thinner and may appear slightly wavy when viewed at the right angle.

Parking Brake issue (1996-2000) Patriot Thunder

The parking brake system on the PT consists of a brake rotor mounted on the driveshaft and a brake caliper used to engage that rotor. The caliper is driven by an air-powered actuator which is controlled from the dashboard switch. Some Patriot Thunders had a design defect with the driveshaft-mounted “Disc Brake Caliper” style parking brake that led to premature wear on one of the brake pads as it “dragged” continuously.
The parts for the PT's brake system are unique, expensive and difficult to obtain. The only place I've been able to obtain anything is at Beaver Coach Sales (BCS) in Bend Oregon, and the last time I purchased an actuator it was around $900. The actuator is an obsolete Haldex part and, if you are lucky, is manufactured on a once-a-year schedule. The same thing is true of the caliper only it is even more expensive. The solution to the problem is to replace the entire parking brake system with a Wabco “Mico BrakeLock” which acts on all four wheels. It's a much stronger parking brake, although expensive starting around $1000 plus installation.
https://www.mico.com/products/brake-actuation/brake-locks

- Note that the regular Patriot (non-Thunder) uses a driveshaft “drum” brake which did not have this issue.

Section 5:

Recall links

Information on Recalls can be found here:

https://auto-recalls.justia.com/beaver-coach/

https://auto-recalls.justia.com/holiday-rambler/

https://auto-recalls.justia.com/monaco-coach/index.html

https://auto-recalls.justia.com/safari-coach/

Section 6:

Suspension info/types

1984 – 1998 Gillig Chassis

The front suspension is equipped with two air springs, while the rear suspension is equipped with either two or four air springs. Neway® and Ridewell® suspensions utilize two and four air springs respectively. The front axles is either a Rockwell or a Dana solid beam steering axle.

The air springs consist of a rubber flex member (the air bag), which is built with a tough rubber lining and outer cover and is reinforced by high-strength synthetic nylon and polyester. This flex member is fitted with rust-resistant retainers at each end. The upper retainer is equipped with an air fitting, and both retainers have protruding bolts for mounting.

There are two suspensions made by Ridewell that can be used on this chassis: (a) 17.5k pound or (b) 25k pound suspension with ride heights of either 7.5" (25k only) or 10.5". Both suspensions are similar in configuration. They both contain a solid rear axle with beams that hold two air springs on each end. The Ridewell suspension systems utilize brackets to link the suspension with the axle and the frame. The axle is attached to the beams with two large brackets. These brackets are secured around the beams with a pair of U-bolts. Large torque arms with bushings are connected from the pivot brackets to the lower crossmember assembly parallel with the rear air springs. All four air springs are attached at the bottom to the beams and at the top to brackets which are mounted to the frame rails with Huck™ bolts. Note that the Ridewell 17.5k pound suspension has a few structural differences from the 25k pound model Most notably, the 17.5k model is lighter and has a pair of torque rods that are directly above and parallel to the torque arms.

- **Ridewell** “rear suspension” is used on some Gillig chassis (4-air bag per axle). There are two versions. Both were only used on the rear suspension (a) one for the 17.5K (a.k.a. 18K lbs.) or (b) for the 25K chassis.

The Ride Height is measured as the distance between the center line of the axle beam and the bottom of the frame rail. Ride Height specs are listed as 7.5" or 10.5” depending on the specifications, for both versions.

- **Neway “**rear suspension” is used on some Gillig chassis (2 air bag per axle). There are two versions. Used on the front and rear suspensions.
  (1) ARD 75-6 used with the medium-duty Dana J-175 rear axle.
  (2) ARD 125-6 used with the heavy-duty Rockwell RC-22-145 rear axle.

  Ride Height adjustment for the Neway is measured as the distance between the center line of the axle beam and bottom of the frame rail. The ride height specs are listed as 7.0" or 7.5" depending on specifications.

- **Gillig Air Ride** (2 air bags per axle). Used on front only.

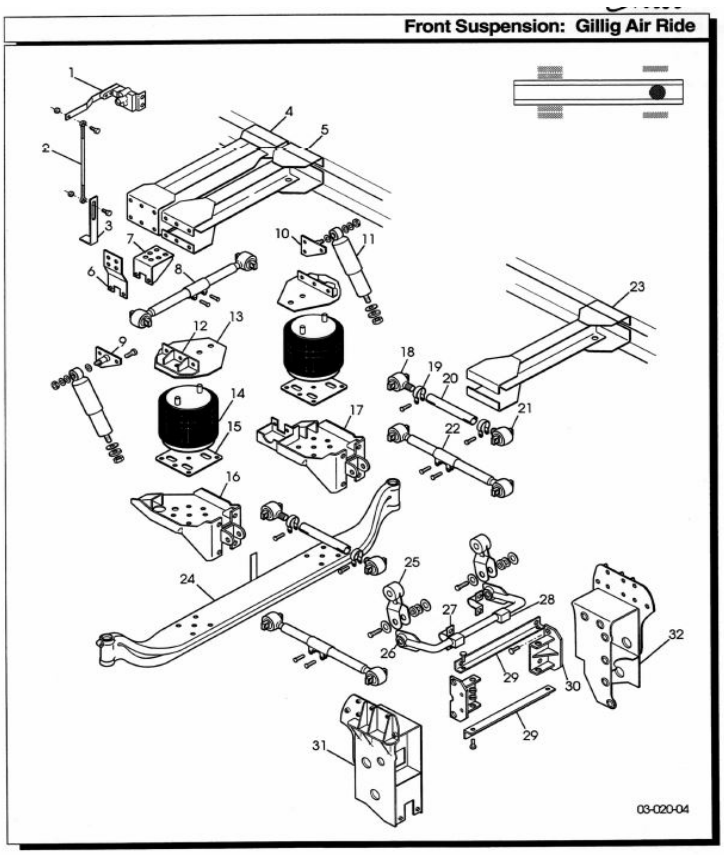

Chapter 3-Suspensions *3-7.02*

1993 -1995 Spartan Chassis

- **Reyco** (Reyco/Granning) (2 air bags per axle) model 102AR air ride was used on the heavy-duty Mountain Master (MM) chassis and the medium-duty IC series chassis.

  Ride height is measured from the top of the axle pad to the bottom of frame rail. Spec is 9.25 inches for the front axle. Rear axle ride height is measured form the horizontal center-line of axle to the bottom of frame rail. Ride Height spec is 7.25 inches for the rear axle.

REYCO/GRANNING 102AR SERIES SUSPENSION

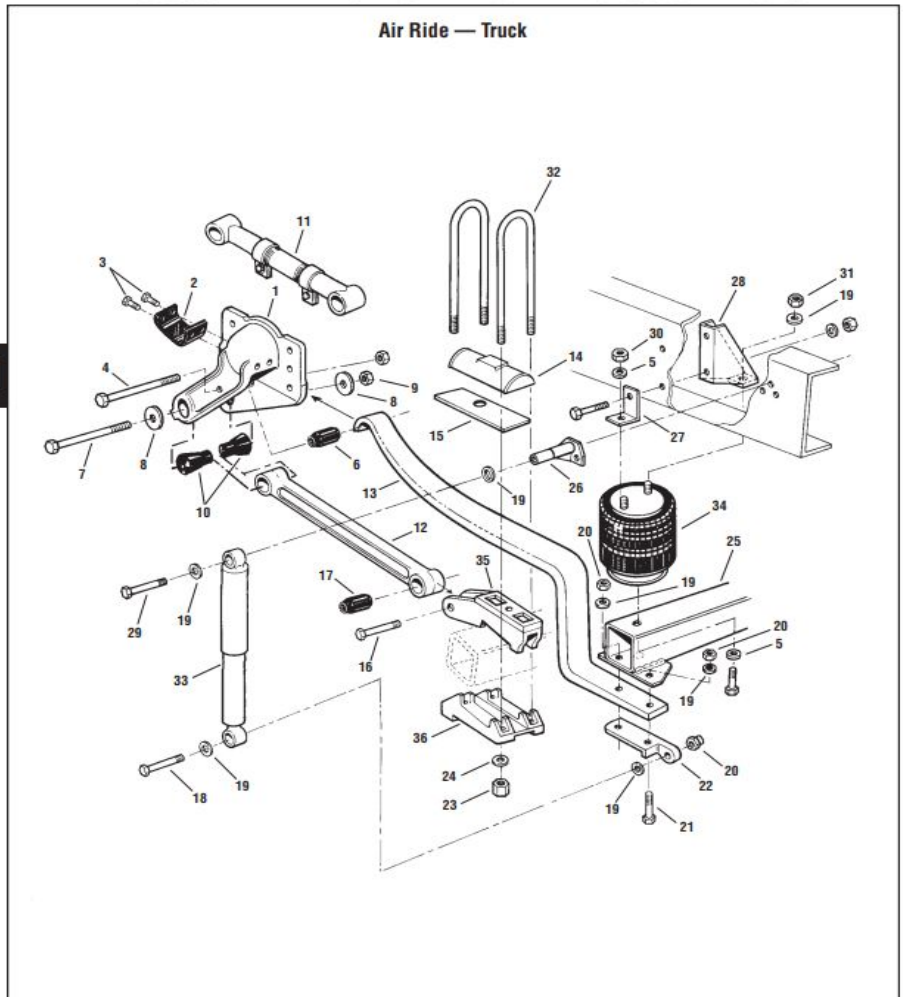

- **Granning Air Ride** (a.k.a. Air Glide) Wide-Track can be found on the front and/or rear suspension of the lighter-duty Spartan EC2000 series chassis.

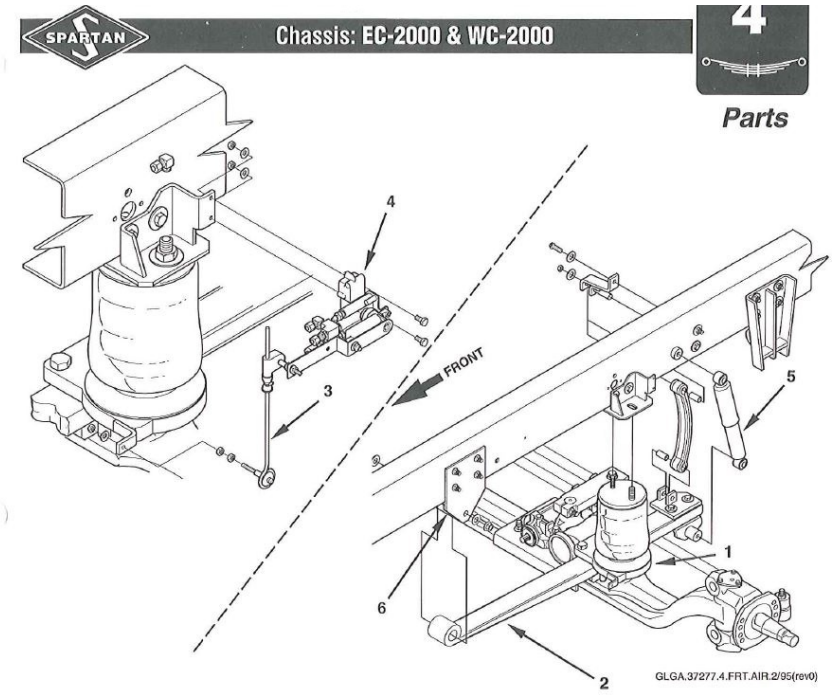

Granning Front Air Suspension

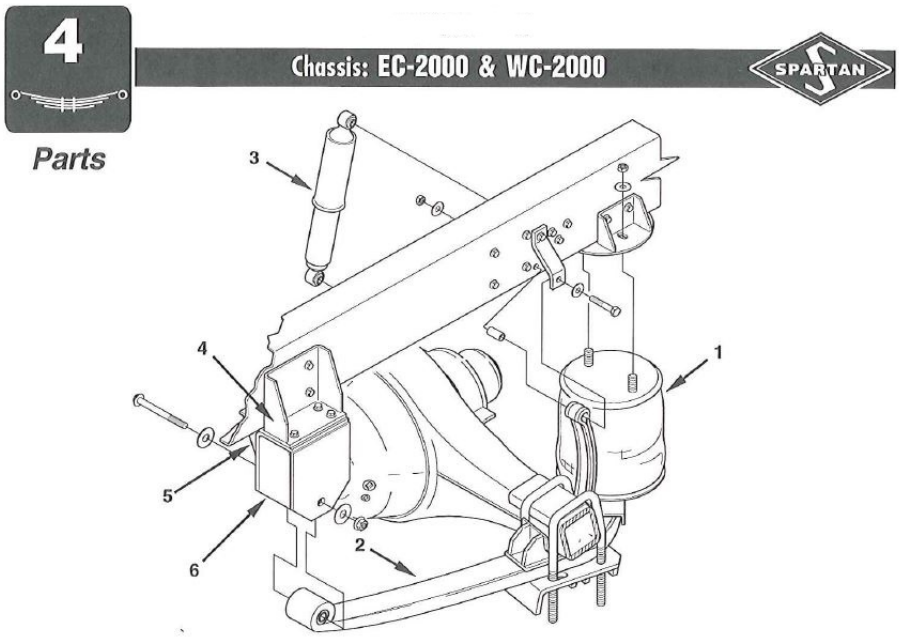

Granning Rear Air Suspension

Safari Motor Corp - Magnum Chassis (1996-2002)

- **S-Series "Blue Streak" (1996-2002) has 2-air bags per axle.**

  The SMC Magnum "Blue Streak" chassis used for the 1996-1999 Monterey used a **Reyco 610AR** air suspension on the rear and a **Reyco 510AR** on the front.

  The 2001 Monterey (36ft chassis and 38ft) had the **Reyco 240AR** suspension in the rear.

  Front: Reyco air bag p/n 20773-01, Firestone air bag W01-358-8959 / IT15LP-2 and/or Firestone Wo1-358-9554 (which cross references to the 1T15LP-2)

Rear: Reyco air bag p/n 20773-01

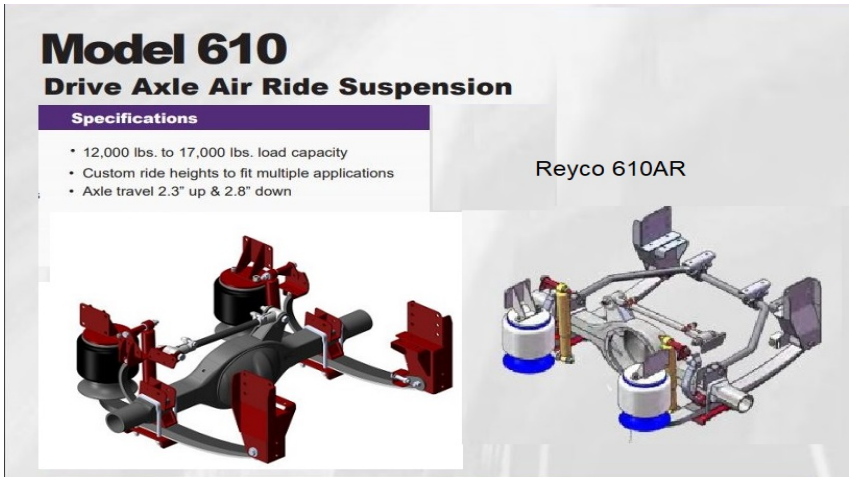

REYCO/GRANNING 240AR SUSPENSION

Air Ride - Truck

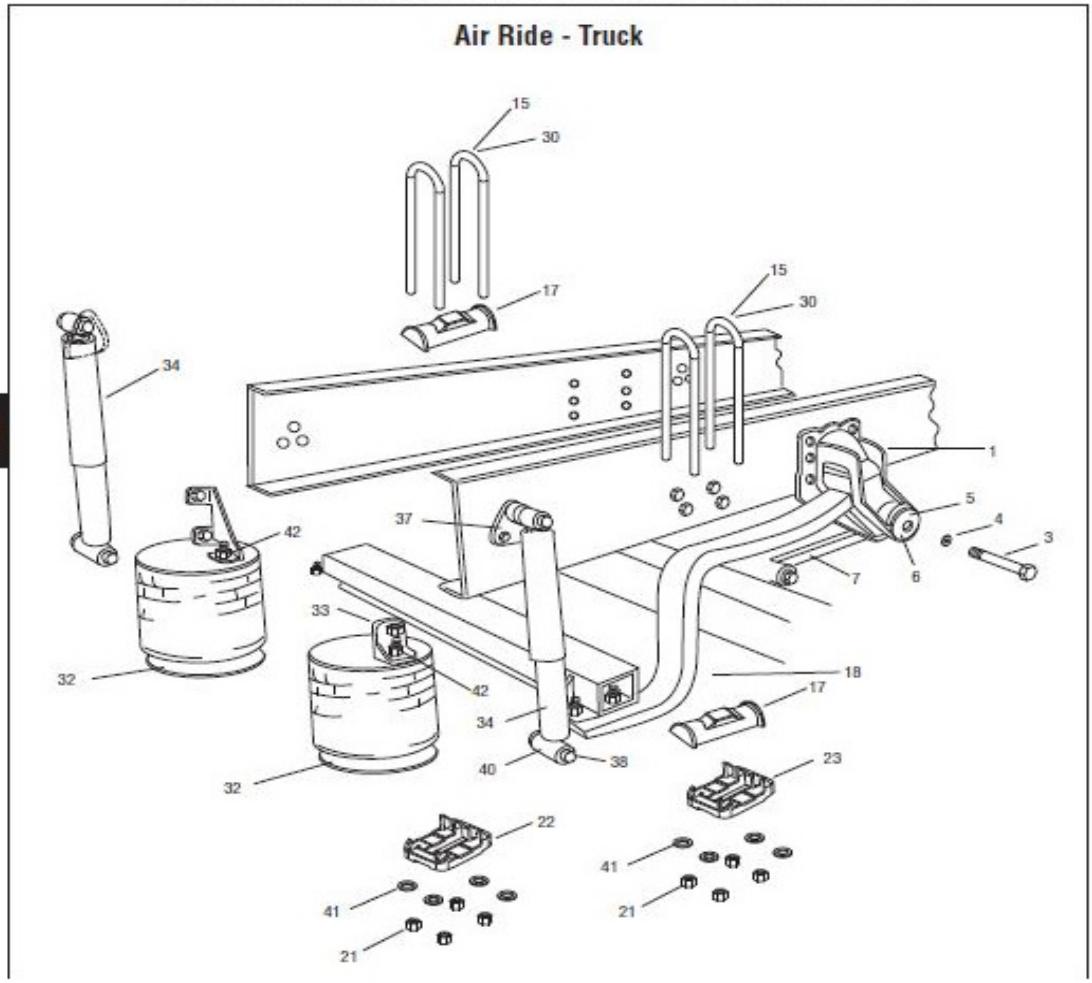

32	S.O.S.	2014201	Air Spring, Std.	2	4	—
32A	S.O.S.	20124-12	Air Spring, Opt.	As Required		—
33	S.O.S.	2012301	Bracket, Inc. w/Air Spring	As Required		—
34A	M89440	2012601	Shock Absorber, 1.75", Premium	6		3-13
34B	M85713	2012901	Shock Absorber, 1.52", Heavy Duty	As Required		3-10
35	S.O.S.	2015501	Bracket, Lower Shock, LH	1	2	—
36	S.O.S.	2015401	Bracket, Lower Shock, RH	1	2	—
37A	S.O.S.	20185-03	Bracket, Upper Shock, 0-1/2" Mounting Ht.	2	4	—
37B	S.O.S.	14480-07	Bolt, 3/4"-16 UNF X 5-5/8" Gr. 8	2	4	
38	E-4961A	14344-01	Lock Nut, 3/4"	4	8	2.34

S.O.S. – Available through Fuelin's S.O.S. Department

B.F. Goodrich Velvet-Ride

- **B-Series “Magnum Air” (1996-2002): 8-bag suspension (4 air bags per axle).**

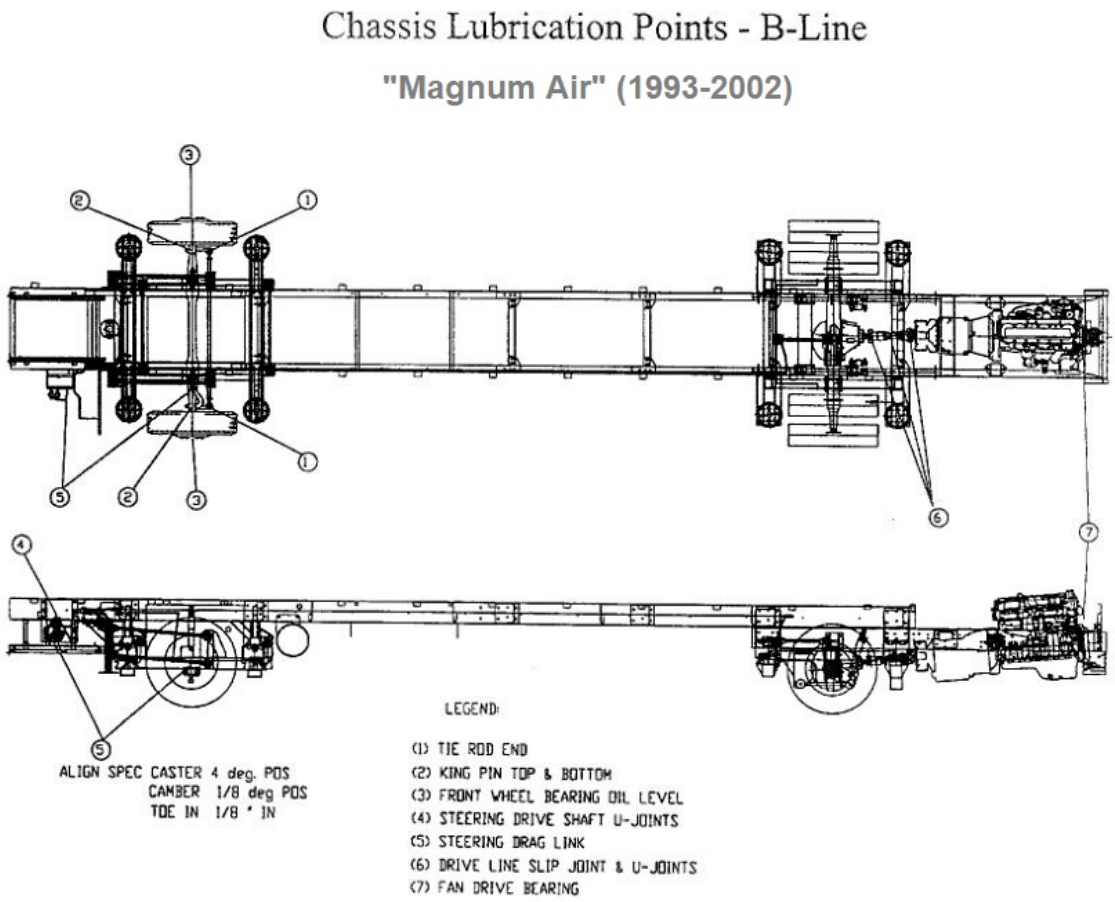

- **C-Series “Big Cat” (1998-2002): 8-bag suspension (4 air bags per axle)**

- **D-Series “Blue Diamond” (1998-2002): 8-bag suspension, 10-bag with Tag axle**

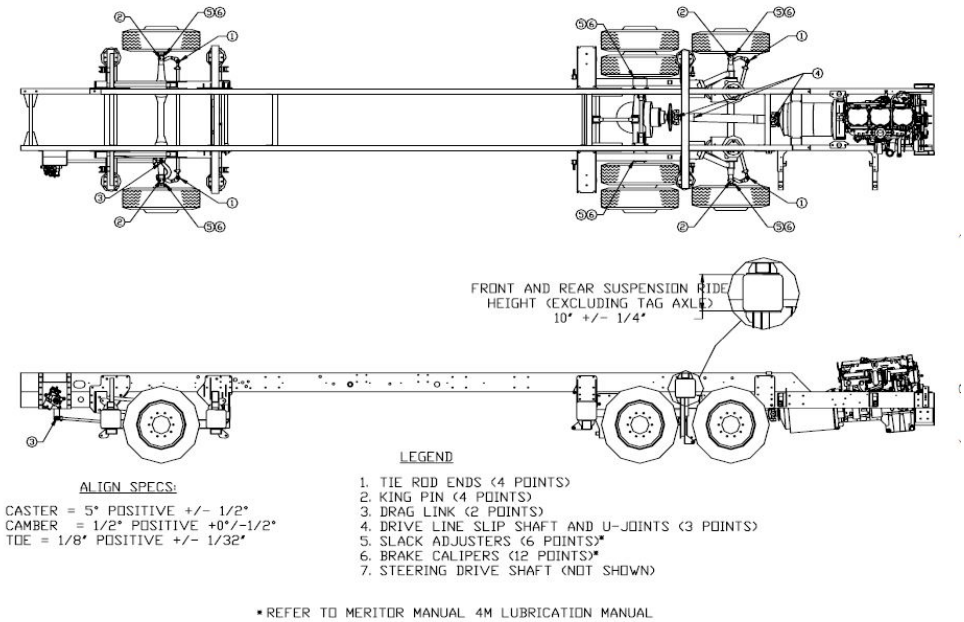

Brakes:

The Magnum C-series and D-series chassis had Bendix-Spicer “full air-brakes”:

1) **2000-2003 PT** (front drum brakes) uses the Bendix (Spicer) EB-15-47 or ES-15-4L (EB = standard brake shoes of uniform thickness, and ES= Extended Service brake shoes which had tapered linings).

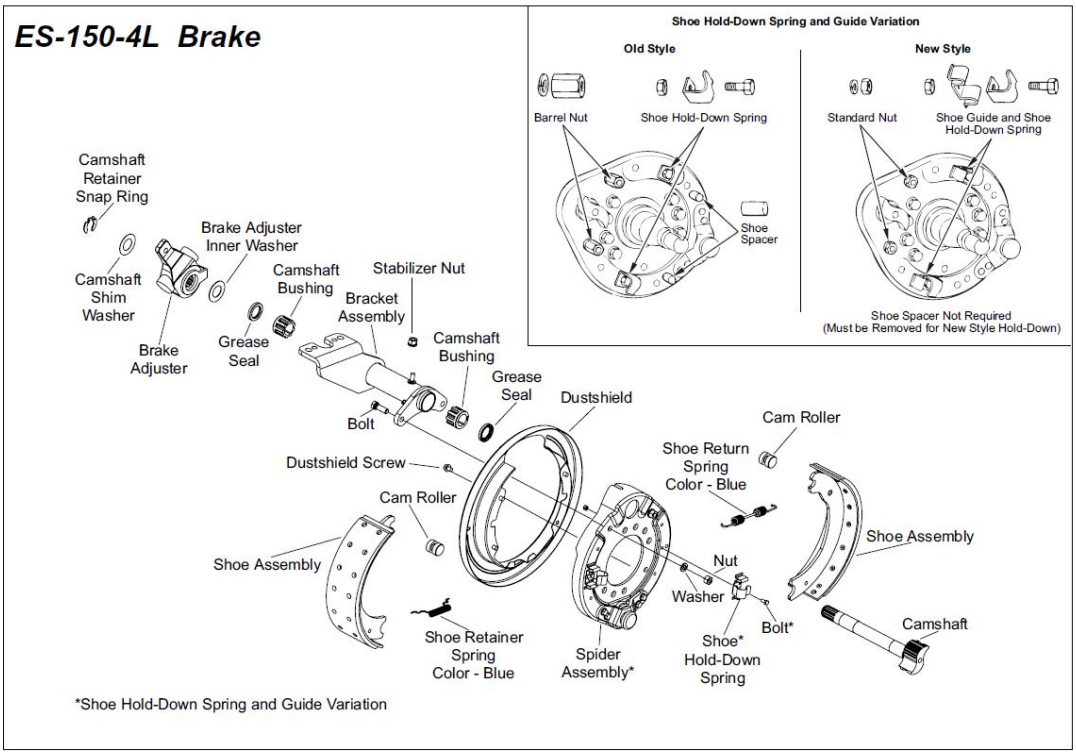

2) The **2004-2005 PT** (Disc Brakes) used the Bendix ESD-225 brake system.

Bendix® ESD-225™ Air Disc Brake Parts Explode

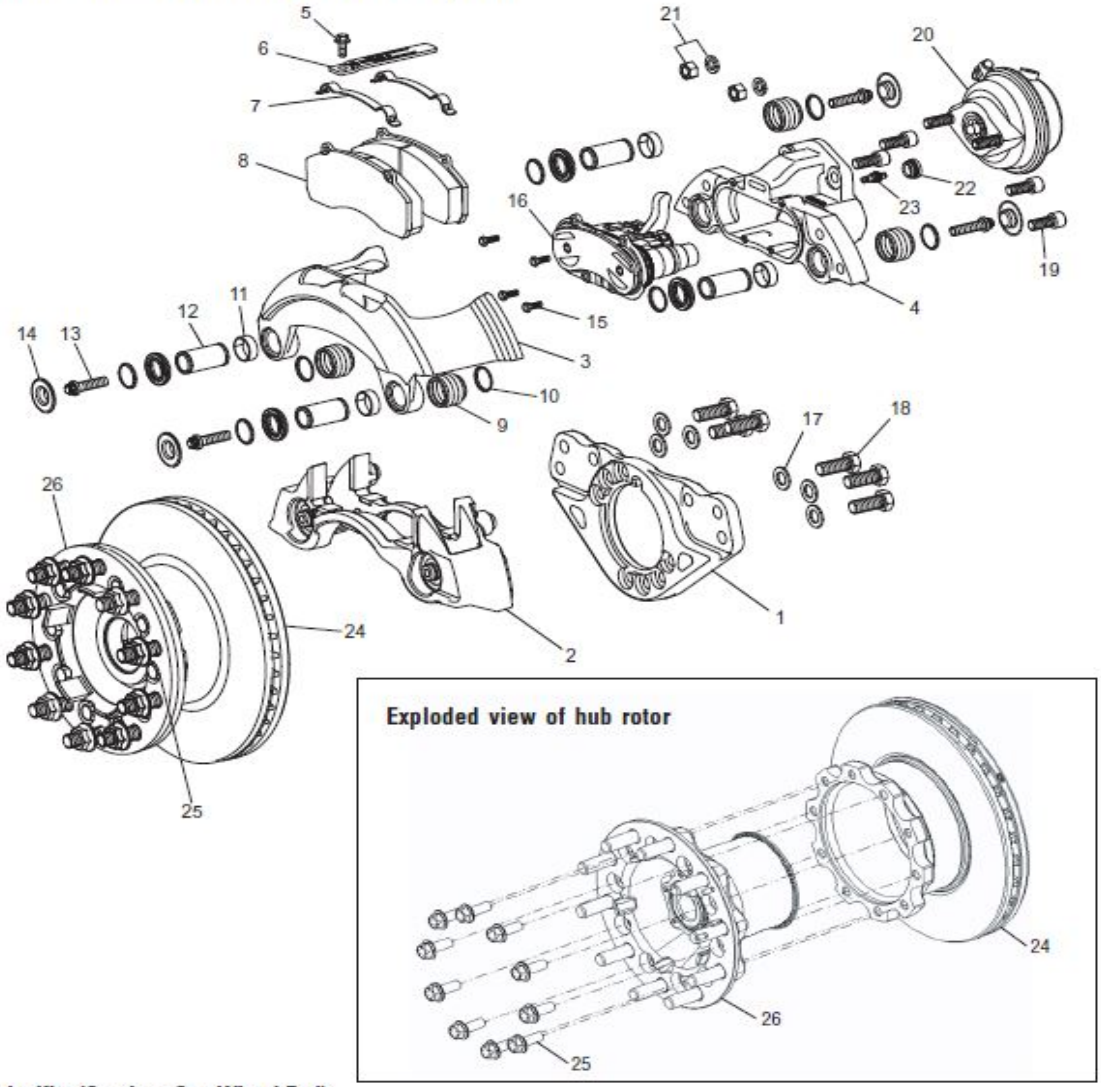

Brake Kits (Services One Wheel End)

Actuator Kit	328864	Incls: Items 15, 16, 22, 23 & Sealant
Minor Overhaul Kit	328865	Incls: Items 9, 10, 13 & 14
Brake Pad Kit	328863	Incls: Items 5, 7 & 8
Major Overhaul Kit	328862	Incls: Items 5, 7, 8, 9, 10, 11, 12, 13 & 14
Air Chamber Kits	see page 5	Incls: Items 20 & 21
Rotor Kit	see page 5	Incls: Items 24 & 25

4

Patriot front disc brakes (2004+)

Later model air disc brakes (after 2005) used the Bendix ADB-22X model. This was an upgraded version of the ESD system. One quick way to the tell the difference is the ESD brakes had a bolt holding the brake pad retaining strap, where the ADB braked used a pin with a clip to hold the pad retaining strap. Item 5 and 6.

"Hydraulic-Over-Hydraulic" and "Air-Over-Hydraulic" Brakes"

The 1998-2000 Magnum B-series (Magnum Air) chassis had either "Hydraulic-Over-Hydraulic" brakes or "Air-Over-Hydraulic" brakes.

Hydraulic-Over-Hydraulic Brakes used a separate pump (usually the power steering pump) to provide apply assist pressure to the hydraulic master cylinder to reduce the amount of pedal force need to be applied by the driver to stop the coach.

This Hydraulic-Over-Hydraulic system used the Bendix-Bosch "Hydro-Max" system. The brake pedal applied force directly to the Hydro-Max input push rod. The Hydro-Max was mounted to the firewall of the coach. An electric motor was mounted to the booster to provide a limited number of assisted braking stops in the event the engine stopped running (no power steering pump pressure assist) while driving. The master cylinder is a dual or split system having two separate fluid reservoirs and output ports. In the event one side failed (ruptured brake line, etc.), the other side of the dual system would provide braking.

Bendix® Hydro-Max Power Brake System

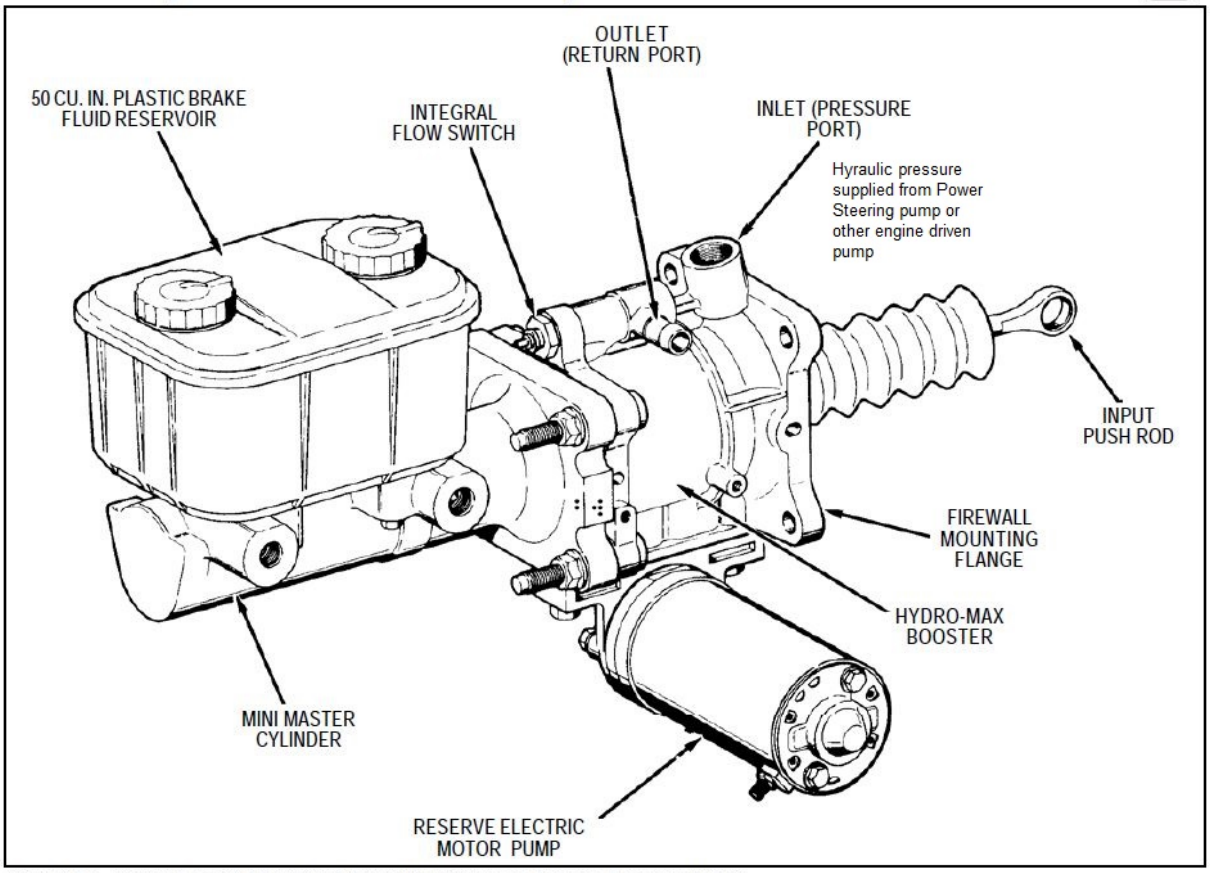

FIGURE 1 - HYDRO-MAX BOOSTER AND MINI MASTER CYLINDER ASSEMBLY

The other style braking system, Air-Over-Hydraulic, was used on coaches that came equipped with air suspension (and therefore had an engine driven air compressor). Air pressure was used as the pressure assist to reduce the amount of pedal force need to be applied by the driver to stop the coach.

This Air-Over-Hydraulic system was supplied by Midland-Haldex. It used a standard air brake chamber mounted to the master cylinder to apply boost pressure to the hydraulic master cylinder. The brake pedal was attached to a treadle valve (air brake valve) in the same configuration as found on an all-air brake system. Air pressure from the treadle valve was routed to the remote mounted master cylinder where it would apply braking assistance via the air diaphragm attached to the master cylinder. Two separate master cylinders (with air chambers) where used to provide a dual or split system so that in the event one side failed (ruptured brake line, failed master cylinder, blown diaphragm in assist, etc.) the other system could still provide braking. The Air Brake Chamber used is a standard truck part with a chamber/diaphragm size number 24 or 30.

Air-Over-Hydraulic

Haldex

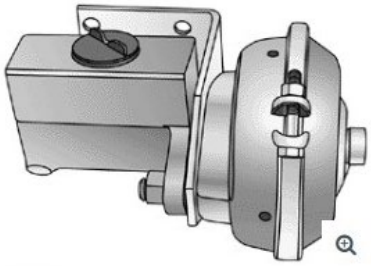

← Series III

Pressure Converter Assembly

Part no. N37216C
Item status Active
Product line Haldex

Series III

- Used in systems which require a small hydraulic displacement.
- Rugged construction.
- Designed with premium quality longlife components.
- Units available for use with either DOT3/DOT4 brake fluid.
- Used in systems which require a small hydraulic displacement.
- Rugged construction.
- Designed with premium quality longlife components.
- Units available for use with either DOT3/DOT4 brake fluid.

Section 7:

Engine related info (engine features, HP/TQ ratings, emissions technology):

Caterpillar: (no "over-the-road" engines were produced after 2010)

C7 (2003-2006) (successor to the 3126E); Medium Duty engine, 441 cid.,190 -330 hp, 520-860 ft-lbs. Uses Hydraulic Electronic Unit Injectors (HEUI) fuel injection, Advanced Combustion Emissions Reduction Technology (ACERT), uses a Diesel Oxidation Catalyst (DOC) muffler (catalytic convertor), Single Turbocharger (with mechanical wastegate. Later models had an electronic wastegate regulator. Dual Intake valves and single Exhaust valve. Parent Bore block (engine does not have Liners).

C7S (2007-2010) "Regen engine", ACERT with Common Rail Fuel system, Variable Geometry Turbocharger (VGT), ARD Head, Clean Gas Induction (CGI), and Diesel Particulate Filter (DPF) rather than a DOC. Parent Bore engine (no Liners).

C9 (2003 – 2006); Medium Duty engine, 534 cid., 335–450 hp. 1050-1100 lb-ft., HEUI system. Belt driven Water Pump. ACERT engine, DOC, single Turbo fixed geometry. Sleeved engine (wet Liners), four valves per cylinder.

C9S (2007-2010) "Regen engine", ACERT with Common Rail Fuel System, VGT, ARD head, CGI, and DPF (instead of DOC)

C12 (1994-2003); Heavy Duty engine, pre-emission), 732 cid. 340-505 hp, 1250-1550 lb-ft., push rod engine, intake and exhaust manifolds are on the same side, uses an external fuel rail, water pump is gear driven, gear driven oil pump mounted externally, has an aluminum water manifold mounted on cylinder head. compression brake (Jake Brake) option

C13 (2004-2006); Heavy Duty engine, 760 cid., 380 – 525 hp, 1150 – 1650 lb-ft., engine serial number starts with "KCB", twin turbochargers with precooler, ACERT engine, DOC, Intake Valve Actuator (IAV), gear driven water pump, gear driven externally mounted oil pump, mechanically actuated Electronic Unit Injector (fuel injector driven from camshaft, pushrod engine, four valve per cylinder, compression brake (Jake Brake) option. Wet Liners but with a single O-ring, all C13 engine have a single thermostat (regulator).

C13 (2007-2010) "Regen engine", engine serial number "LEE", same as above ACERT engine but has ARD head, CGI, DPF (instead of DOC).

C15 (2003–2010) successor to the 3406E; 893 cid., power ratings are 435-625 hp.,1350–1850 lb-ft (early models are **C-15** single Turbo (starting with engine serial number "6NZ" to "MBN"), overhead camshaft, later models (after 2003) engines are ACERT (**C15** "no dash") with serial numbers starting with "BXS, MXS, and NXS", They use IVAs with twin turbos and a

precooler. After 2007 a “Regen” engine (serial number “SDP”), uses ACERT with ARD head, CGI, DPF.

Cummins:

ISB (5.9L) “6BT” 12-valve (1989-2007); 190-325 hp, Bosch common rail fuel system/VE rotary pump or P7100 inline pump or CAV rotary pump. Fixed Geometry Turbo, Parent Bore block (no liners).

ISB (6.7L), 24-valve (2007.5-present); 300-360 hp, 660-800 ft-lb. High Pressure Common Rail (HPCR) system, Variable Geometry Turbocharger (VGT). Parent Bore block.

ISC (8.3L) (1998-2013); 240-400 hp, 660-1075 ft-lb. used the Cummins Accumulator Pumps System (CAPS). Went to HPCR and VGT in 2003. Sleeved block (uses Liners).

ISL 9 (8.9L); 250-400 hp, 730-1250 ft-lb. After 2016 renamed “L9”. Sleeved block

ISM 11 (10.8L) (1998-); 280-500 hp, 925-1550 ft-lb. Sleeved block

ISX 12; 330-425 hp, 1150-1650 ft-lb.; Sleeved block

ISX 15; 400-650 hp, 1650-2050 ft-lb.

Models are: the “CM870” with EGR in the 2002, then for 2008 the “CM871” with DPF, and in 2010 the “CM2250 with enhanced EGR, DPF, and SCR. Used a dual overhead cam with High Pressure Injection (HPI) until 2010, then went to Common Rail Fuel Injection (eliminated the Injector Camshaft).

Emissions timeline (major emissions technology/system used):

2003: EGR (Exhaust Gas Recirculation) or (ACERT with CGI for Caterpillar)

2007: DPF (Diesel Particulate Filter)

2010: SCR / DEF (Selective Catalyst Reduction / Diesel Exhaust Fluid)

For model years 2004 through 2006, the EPA's emission standards were aimed primarily at reducing NOx emissions from highway engines to levels of approximately 2.0 g/bhp·hr. So most manufacturers introduced what we've come to know and love as exhaust gas recirculation (EGR). Note that Caterpillar did not use (call it) EGR.

For model year 2007 and later, with the focus was on both emissions and diesel fuel itself. That's when we got low-sulfur diesel fuel, with the sulfur content in on-highway diesel fuel chopped to 15 ppm from the previous 500 ppm. The reason was that sulfur plays havoc with the catalytic diesel

particulate filters and NOx catalysts that engine makers had to use for 2007-10 emission requirements.

For achieving additional NOx reduction to meet the 2007 requirements (about 1.2 g/bhp-hr, based on phase-in provisions of the 2010 limit of 0.2 g/bhp-hr), Caterpillar introduced a low pressure loop EGR system, where the exhaust gas drawn downstream of the particulate filter—cleaned from the particulates—is recirculated into the intake air. Caterpillar named the technology the Clean Gas Induction (CGI), thus, avoiding the usage of the term “EGR” in the context of ACERT engines, which have been competing against EGR-based technologies

Effective on Jan. 1, 2007 we got new and stringent limits for particulate matter (PM), down from 0.10 to a tiny 0.01 g/bhp-hr,. and NOx had to be cut back further, down to 0.20 g/bhp-hr, but manufacturers could phase that in between 2007 and 2010 on a percent-of-sales basis: 50% in 2007 through 2009 and 100% by 2010. Hardly any engine sold through the end of 2009 met the ultimate NOx standard, and it seems most engine makers certified their engines to a NOx value of about 1.2 g/bhp-hr on average.

And then came 2010, by which time NOx had to be down to that difficult 0.20 g/bhp-hr, which necessitated some big engine changes. There wasn't actually a new regulatory demand because the NOx requirement had been established as part of the 2007 regime. In theory, had the technology been available, engine makers could have dealt with the 0.20 NOx requirement back in 2007.

That brought us selective catalytic reduction (SCR) and diesel exhaust fluid (DEF) and that's where most folks are now, with significant fuel economy improvements compared to 2007. And after more than a decade of work refining things like sensor technology, strides have been made on the reliability front.

There was also a small but significant change in 2013 with the requirement for on-board diagnostics (OBD) for all on-highway diesel engines. It monitors the truck’s emission system to detect issues and recognize faults. When things go awry, the driver will know by way of a dash lamp known as the Malfunction Indicator Lamp (MIL). If it lights up the red 'Stop Engine' lamp, it means what it says. These diagnostics cover the engine at large too, meaning potentially expensive problems can be seen and dealt with early, before they absorb large amounts of cash in repairs or low fuel economy.

The “Miller Cycle”

A traditional Otto cycle engine uses four "strokes", of which two can be considered "high power" the compression stroke (high power consumption) and power stroke (high power production). Much of the internal power loss of an engine is due to the energy needed to compress the charge during the compression stroke, so systems that reduce this power consumption can lead to greater efficiency.

In the Miller cycle, the intake valve is left open longer than it would be in an Otto cycle engine. In effect, the compression stroke is two discrete cycles: the initial portion when the intake valve is open and final portion when the intake valve is closed. This two-stage intake stroke creates the so called "fifth" stroke that the Miller cycle introduces. As the piston initially moves upwards in what is traditionally the compression stroke, the charge is partially expelled back out the still-open intake valve. Typically this loss of charge air would result in a loss of power. However, in the Miller cycle, this is compensated for by the use of a supercharger (or Turbocharger). The supercharger typically will need to be of the positive displacement (Roots or Screw) type due to its ability to produce boost at relatively low engine speeds. Otherwise, low-rpm torque will suffer.

A key aspect of the Miller cycle is that the compression stroke actually starts only after the piston has pushed out this "extra" charge and the intake valve closes. This happens at around 20% to 30% into the compression stroke. In other words, the actual compression occurs in the latter 70% to 80% of the compression stroke.

In a typical engine, the Miller cycle yields an additional benefit. The intake air is first compressed by the supercharger and then cooled by an intercooler. This lower intake charge temperature, combined with the lower compression of the intake stroke, yields a lower final charge temperature than would be obtained by simply increasing the compression of the piston. This allows ignition timing to be advanced beyond what is normally allowed before the onset of detonation, thus increasing the overall efficiency still further. An additional advantage of the lower final charge temperature is that the emission of NOx in diesel engines is decreased, which is an important design parameter in large diesel engines on board ships and power plants.

Efficiency is increased by raising the compression ratio. In a typical gasoline engine, the compression ratio is limited due to self-ignition (detonation) of the compressed, and therefore

hot, air/fuel mixture. Due to the reduced compression stroke of a Miller cycle engine, a higher overall cylinder pressure (supercharger pressure plus mechanical compression) is possible, and therefore a Miller cycle engine has better efficiency.

Caterpillar's implementation of the Miller Cycle (the IVA):

An "Intake Valve Actuator" or IVA (also known as a "Variable Valve Actuator" or VVA) is a device that contacts the intake rocker arm and holds the intake valve of an ACERT CAT engine open in an effort to lower the cylinder temperatures of the engine. This is done to help lower NOX emissions.

The Actuator is electronically controlled and hydraulically activated very similar to a Jake Brake.
The variable valve actuators are used in order to control the closing of the inlet valves. The variable valve actuators do not operate until the engine oil has reached a desired temperature. The oil for the variable valve actuator flows from the oil filter base to an oil rail that is outside of the head. If the oil temperature is below the desired temperature, the diverter valve in the oil rail is open. The open diverter valve allows the oil to drain back into the head. When the oil temperature is increased, the diverter valve is closed. This closing pressurizes the oil rail and the housings for the variable valve actuators. The pressure in the oil rail will be 36 ± 7 psi higher than the rest of the lubrication system. Bleed holes are located in the housing in order to exhaust the pressurized oil.
The variable valve actuators hold the inlet valves open. The valves would normally close with the profile of the camshaft lobe. The solenoid is energized while the inlet valves are open. The solenoid allows pressurized oil to fill the cylinder. The pressurized oil pushes down the piston. As the inlet valve starts to close, the valve rocker arm for the inlet valve contacts the piston. The piston holds the inlet valves open.
In order to close the inlet valve, the solenoid is de-energized and the oil is allowed to leave the cylinder. The valve spring force pushes up on the rocker arm. The rocker arm pushes the piston back into the normal position of the piston. The inlet valves are then closed.

Monaco RV, LLC

UPDATED 2009

VIN Postion	WMI Code	VIN Character	Description
1, 2 & 3	WMI Code	51Z	Incomplete Vehicle, Chassis
1	Country of Manufacture	1	USA
2	Manufacturer	R	Roadmaster
3	Vehicle Type	F	Chassis Frame
4	Model/Series/Chassis Type {49CFR565.6(b) Table I)	1	S-Series Monocoque
		2	RR4R A/E-Series Stacked Rail
		3	RSR
		4	RR8R, RR8S, RR10R, or RR10S R-Series
		5	R4R A-Series Straight Rail
		6	RR4R A/E-Series Stacked Rail
		7	R4FE Straight Rail
		B	M4R D-Series
		C	M8R, M8S, or M10S M-Series

5	Engine Type (Displacement, # of Cylinders & Fuel Type (49CFR565.6(b) Table I)	1	5.9 Litre ISB 6-Cvlinder/Diesel
		2	8.3 Litre ISC 6-Cylinder/Diesel
		3	8.8Litre ISL 6-Cylinder/Diesel
		4	11.0 Litre ISM 6-Cylinder/Diesel
		5	7.2 Litre C7 6-Cvlinder/Diesel
		6	12.0 Litre C12 6-Cylinder Diesel
		7	15.0 Litre ISX 6-Cylinder/Diesel

		8	14.0 Litre 60-Series 6-Cylinder Diesel
		9	8.8 Litre C9 6-Cylinder Diesel
		0	12.5 Litre C13 6-Cylinder/Diesel
		A	15.2 Litre C15 6-Cylinder/Diesel
		B	6.7 Litre ISB 6-Cyl/EPA 07 Diesel

6	Body Type/GVWR (49CFR565.6(b) Tables I & II)	1	Motorhome/10,000 and under (class A-H)
		2	Motorhome/10 001 to 19,500 (classes 3-6)
		3	Motorhome/19,501 to 26,000 (class 6)
		4	Motorhome/26 001 to 33,000 (class 7)
		5	Motorhome/33,001 and over (class 8)
		6	Bus/10,000 and under (classes A H)
		7	Bus/10 001 to 19 500 (classes 3 - 6)
		8	Bus/19,501 to 26 000 (class 6)
		9	Bus/26,001 to 33,000 (class 71
		A	Bus/33,001 and over (class 8)

7	Wheelbase	1	100” to 150”
		2	151" to 200”
		3	201” to 215”
		4	216" to 230"
		5	231" to 250”
		6	251" to 280"
		7	281" to 300"
		8	301" to 330"

8	Axle (Front - Rear)/Brake Type (49CFR565.6(b) Table I)	1	Single - Tandem/Air
		2	Single - Tandem/Air over Hydraulic
		3	Single - Tandem/Hydraulic

		4	Single -Single/Air
		5	Single - Single/Air over Hydraulic
		6	Single - Single/Hydraulic
9	49 CFR 565.5(c)	Check Digit	Calculated

10	Model Year (49CFR565.6(d)(1) Table VI)	1	2001
		2	2002
		3	2003
		4	2004
		5	2005
		6	2006
		7	2007
		8	2008
		9	2009
		A	2010
		B	2011
		C	2012
		D	2013
		E	2014
11	Plant Location (49CFR565.6(d)(2))	1	Coburg., OR
		2	Elkhart, IN
		3	Wakarusa, IN /Harrisburg, Oregon
12	49 CFR 565.6(d) (3)	6 Digit Serial Number	Sequential
13			
14			
15			

MAGNUM

Chassis Order Form

Serial Number

Mfg. Code			A	B	C	D	E	CHK	F							
4	S	L								1	1					

Configuration

A - Product Line	☐ **A - Magnum M-Series "Blue Max"** ☐ **B - Magnum S-Series "Blue Streak"** ☐ **C - Magnum B-Series, "Magnum Air"** ☐ **D - Magnum C-Series**	☐ **F - Magnum D-Series "B. Diamond"** ☐ **G - Magnum R-Series** ☐ **H - Magnum Millenium**
B - GVWR	☐ 1 – 29,000 LBS ☐ 6 – 52,200 LBS ☐ 2 – 29,500 LBS ☐ 7 – 26,500 LBS ☐ 3 – 31,000 LBS ☐ 8 – 28,000 LBS ☐ 4 – 36,200 LBS ☐ 9 – 32,700 LBS ☐ 5 – 47,000 LBS ☐ 0 – 30,000 LBS	
C - Wheelbase	☐ **A – 178"** ☐ **F – 195"** ☐ **L – 266"** ☐ **U – 257"** ☐ **B – 228"** ☐ **G – 276"** ☐ **P – 310"** ☐ **C – 208"** ☐ **H – 272"** ☐ **R – 262"** ☐ **D – 238"** ☐ **J – 270"** ☐ **S – 260"** ☐ **E – 252"** ☐ **K – 231"** ☐ **T – 263"**	
D - Engine	☐ N - Caterpillar 3126B 300 HP ☐ P - Caterpillar 3126B 330 HP ☐ R - Caterpillar C-12 425 HP ☐ S - Caterpillar C-12 455 HP	☐ V - Caterpillar 3126B 275 HP ☐ W- Cummins ISC 350HP ☐ X- Caterpillar C-12 505HP
E - Brakes	☐ 1 - Air ☐ 2 – Hydraulic	☐ 3 - Air / Hydraulic
F - Model Year	☐ 1 – 2001 ☐ 5 – 2005 ☐ 9 – 2009 ☐ C – 2012 ☐ F – 2015 ☐ 2 – 2002 ☐ 6 – 2006 ☐ A – 2010 ☐ D – 2013 ☐ G – 2016 ☐ 3 – 2003 ☐ 7 – 2007 ☐ B – 2011 ☐ E – 2014 ☐ H – 2017 ☐ 4 – 2004 ☐ 8 – 2008 R-1994 S-1995 T-1996 V-1997 W-1998 X-1999 Y-2000	
Suspension	☐ Velvet-Ride	☐ Air Ride

- **VIN Scheme –**

4SL	A	6	E	L	2	5	K	1	100100
1	2	3	4	5	6	7	8	9	10

1. Designates Chassis Manufacture — 4SL – Magnum Mfg. A Div. of SMC Inc.

2. Designates Model Line
   - A- M Series
   - B- S Series
   - C- B Series
   - D- C Series
   - F- D Series
   - G- R Series
   - H- Millenium

Spartan Motors Chassis, Inc.
VIN Code Description

4	V	Z	F	P	0	2	9	8	V	C	0	2	1	5	7	2

WORLD MFG. IDENTIFICATION NUMBER
4VZ –CABLESS CHASSIS
4S7 –CAB CHASSIS
POSITIONS NO. 1–3

MODEL LINE
POSITION NO. 4

GVWR–BRAKE
POSITION NO. 5

ENGINE LINE
POSITION NO. 6 & 7

CAB TYPE
POSITION NO. 8

SEQUENTIAL SERIAL NO.
POSITION 12–17

PLANT LOCATION
CHARLOTTE, MI
POSITION NO. 11

MODEL YEAR
POSITION NO. 10

CHECK DIGIT
POSITION NO. 9

1995–1999 MODEL YEAR APPLICATION

POSITION NO. 4
4VZ-CABLESS MODEL LINE

LET.	MODEL
A	K2
B	MOUNTAIN MASTER
C	HIGHLANDER
D	ALPINE
E	EXP-2001
F	EXP-2001-H SERIES
G	P8-S BUS
H	SCHOOL BUS
J	TOUR BUS
K	TRANSIT BUS
L	SHUTTLE BUS
M	FORWARD CONTROL
N	LOW FLOOR
P	FRONT WHEEL DRIVE
R	SPECIALTY VEHICLE
S	Z2
T	BC
U	AV
V	BV
X	CV
Y	TB
Z	VECTOR 4X4
0	CFR 4X4
1	CFR 6X6
2	CHARGER
3	RANGEMASTER
4	SUMMIT (SU)

POSITION NO. 4
4S7-CAB MODEL LINE

LET.	MODEL
A	GLADIATOR
B	DIAMOND SERIES
C	METRO STAR
D	CHARGER
E	BARON
F	SILENT KNIGHT
G	SPECIALTY VEHICLE
H	ADVANTAGE
J	LOW PROFILE
K	GT-ONE
L	KICKER
M	CONCRETE MIXER
N	SWEEPER
P	REFUELER
R	FRONT WHEEL DRIVE
S	TR-1
T	CFR 4X4
U	CFR 6X6

POSITION NO. 8
CAB TYPE

NO.	CAPACITY
1	1 PERSON
2	2 PERSON
3	3 PERSON
4	4 PERSON
5	5 PERSON
6	6 PERSON
7	7 PERSON
8	8 PERSON
9	MULTI-PASS
0	10 PERSON

POSITION NO. 10
MODEL YEAR

YEAR	CODE
1995	S
1996	T
1997	V
1998	W
1999	X
2000	Y

GVWR/BRAKE SYSTEM POSITION NO. 5

LET.	GVWR RANGE (IN POUNDS)	BRAKE SYSTEM	LET.	GVWR RANGE (IN POUNDS)	BRAKE SYSTEM
A	10,000–14,000	AIR	N	26,001–32,000	AIR
B	10,000–14,000	HYD	P	26,001–32,000	HYD
C	10,000–14,000	AIR/HYD	R	32,001–38,000	AIR
D	14,001–16,000	AIR	S	32,001–38,000	HYD
E	14,001–16,000	HYD	T	38,001–46,000	AIR
F	14,001–16,000	AIR/HYD	U	46,001–54,000	AIR
G	16,001–19,500	AIR	V	54,001–62,000	AIR
H	16,001–19,500	HYD	W	62,001–70,000	AIR
J	16,001–19,500	AIR/HYD	X	70,001–OVER	AIR
K	19,501–26,000	AIR			
L	19,501–26,000	HYD			
M	19,501–23,000	AIR/HYD			

ENGINE LINE POSITION NO. 6 & 7

NUM.	MODEL	NUM.	MODEL
01	CUMMINS B5.9 160HP	50	NAVISTAR T444E 230HP
02	CUMMINS B5.9 190HP	51	NAVISTAR T444E 250HP
03	CUMMINS B5.9 210HP	52	NAVISTAR 530E 250HP
04	CUMMINS B5.9 230HP	53	NAVISTAR 530E 275HP
05	CUMMINS B5.9G 195HP	54	NAVISTAR 530E 300HP
06	CUMMINS C8.3 210HP	55	NAVISTAR 530E 320HP
07	CUMMINS C8.3 250HP	56	NAVISTAR DT466
08	CUMMINS C8.3 275HP	57	CUMMINS ISB 275HP
09	CUMMINS C8.3 300HP	58	DETROIT 8V92T 540HP
10	CUMMINS C8.3 325HP	59	DDC 6V 350HP
11	CUMMINS M11 280HP	60	CUMMINS N14E 370HP
12	CUMMINS M11 320HP	61	DDC SERIES 60 330HP (358)
13	CUMMINS M11 350HP	62	CUMMINS ISB 250HP
14	CUMMINS M11 370HP	63	CUMMINS B5.9 180HP
15	CUMMINS M11 400HP	64	VM MOTORI (DDC 538)
16	CUM. M11 CELECT PLUS 400HP	65	CUMMINS ISB 230HP
17	CUM. M11 CELECT PLUS 450HP	66	CUMMINS B5.9 175HP
18	CUMMINS M11E 320HP	67	CUMMINS B5.9 215HP
19	CUMMINS M11E 350HP	68	DETROIT 8V92T 585HP
20	CUMMINS M11E 360HP	69	DETROIT 8V92T 710HP
21	CUMMINS M11E 370HP	70	DDC SERIES 40 275HP
22	CUMMINS M11E 400HP	71	CUMMINS ISB 210HP
23	CUMMINS M11E 450HP	72	CUMMINS ISB 175HP
24	CUMMINS N14E 435HP	73	CUMMINS ISB 190HP
25	CUMMINS N14E 450HP	74	CUMMINS ISB 195HP
26	CAT 3116 210HP	75	CUMMINS ISB 215HP
27	CAT 3116 230HP	76	CATERPILLAR 3126 190HP
28	CAT 3116 250HP	77	DDC SERIES 40 330HP
29	CAT 3116 275HP	78	CUMMINS ISC 250HP
30	CAT 3116 300HP	79	CUMMINS ISC 275HP
31	CAT 3126 210HP	80	CUMMINS ISC 300HP
32	CAT 3126 230HP	81	CUMMINS ISC 330HP
33	CAT 3126 250HP	82	CUMMINS ISC 350HP
34	CAT 3126 275HP	83	CUMMINS B5.9LPG 195HP
35	CAT 3126 300HP	84	CUMMINS C8.3G 250HP
36	DDC SERIES 40 300HP	85	CUMMINS B5.9 174HP (INDUST.)
37	DDC SERIES 50 350HP	86	CUMMINS ISB 215HP (LEV)
38	DDC SERIES 60 350HP	87	CUMMINS ISM 330HP
39	DDC SERIES 60 370HP	88	CUMMINS ISM 350HP
40	DDC SERIES 60 400HP	89	CUMMINS ISM 370HP
41	DDC SERIES 60 430HP	90	CUMMINS ISM 400HP
42	DDC SERIES 60 470HP	91	CUMMINS ISM 450HP
43	DDC SERIES 60 500HP	92	CUMMINS ISM 500HP
44	HERCULES GTA 3.7 130HP	93	CUMMINS ISB 210HP (LEV)
45	HERCULES GTA 5.6 190HP	94	CUMMINS ISM 320HP
46	NAVISTAR T444E 175HP	95	CUMMINS ISM 380HP
47	NAVISTAR T444E 190HP	96	CUMMINS ISB 260HP
48	NAVISTAR T444E 210 LOW TORQUE	97	
49	NAVISTAR T444E 210 HIGH TORQUE	98	

#VIN99-060800-G

SPARTAN CHASSIS, INC. www.spartanchassis.com

01-005-T-01

VIN SYSTEM

1	2	3	4	5	6	7	8	9	10	11	12	13	14	15	16	17
4	V	Z	A	U	1	B	9	2	3	C	0	3	9	5	7	2

Post#11: C = Charlotte MI

Post#12-17: Sales Order No.

Post# 1,2,3

WORLD Mfg ID	
4VZ	CABLESS
4S7	CAB

Post# 4

4VZ - CABLESS MODEL LINE	
A	K3
B	MOUNTAIN MASTER (MM)
D	SUMMIT (SU) / NVS
K	SPECIALTY VEHICLE (SP)
P	CFR
T	TVC
V	K3
X	COMPETITOR
Y	
Z	
0	
1	
2	

4S7 - CAB MODEL LINE	
A	GLADIATOR
B	DIAMOND
C	METRO STAR
E	BARON
G	SPECIALTY VEHICLE
H	ADVANTAGE
J	LOW PROFILE
K	CFR
R	MOUNTAIN STAR
T	AMBULANCE
U	ATR-1
X	
Y	

Post# 5

GVWR / BRAKE SYSTEM		
A	10000 - 14000	AIR
B	10000 - 14000	HYD
D	14001 - 16000	AIR
E	14001 - 16000	HYD
G	16001 - 19500	AIR
H	16001 - 19500	HYD
K	19501 - 26000	AIR
L	19501 - 26000	HYD
N	26001 - 32000	AIR
P	26001 - 32000	HYD
R	32001 - 38000	AIR
S	32001 - 38000	HYD
T	38001 - 46000	AIR
U	46001 - 54000	AIR
V	54001 - 62000	AIR
W	62001 - 70000	AIR
X	70001 - OVER	AIR

Post#6

ENGINE LOCATION	
1	REAR
2	FRONT
3	MID

Post#7

ENG SERIES		
A	CUMMINS	ISB
B	CUMMINS	ISC
C	CUMMINS	ISM
D	CUMMINS	ISL
E	CUMMINS	ISX
F	DETROIT DIESEL	SERIES 60
G	DETROIT DIESEL	12V2000
H	CATERPILLAR	3126E
J	CATERPILLAR	C9
K	CATERPILLAR	C10
L	CATERPILLAR	C12
M	CATERPILLAR	C7
N	CATERPILLAR	C11
P	CATERPILLAR	C13
R	CATERPILLAR	C15
S	FORD P-STROKE	6.0L

DIESEL		
DIESEL		
DIESEL		
DIESEL		
DIESEL		
DIESEL		
DIESEL		
DIESEL		
DIESEL		
DIESEL		
DIESEL		
DIESEL		
DIESEL		
DIESEL		
DIESEL		
DIESEL		

Post# 8

CAB TYPE	
1	1 PERSON
2	2 PERSON
3	3 PERSON
4	4 PERSON
5	5 PERSON
6	6 PERSON
7	7 PERSON
8	8 PERSON
9	MULTI-PASS
0	10 PERSON

Post#10

MODEL YEAR	
X	1999
Y	2000
1	2001
2	2002
3	2003
4	2004
5	2005
6	2006
7	2007
8	2008
9	2009

VIN Check Digit Calculation Diagram

Post# 9 (Check Digit)

Calculation of a Check Digit

VIN Position	1	2	3	4	5	6	7	8	9	10	11	12	13	14	15	16	17	
Actual VIN	4	V	Z	A	U	1	B	9	*	3	C	0	3	9	5	7	2	
Conversion Value	4	5	5	1	4	1	2	9	*	3	3	0	3	9	5	7	2	
Multiplier	8	7	6	5	4	3	2	10	0	9	8	7	6	5	4	3	2	
Converted Values x Multiplier	32	35	54	5	16	3	4	90	0	27	24	0	18	45	20	21	4	398

Conversion Tbl

A = 1	N = 5
B = 2	P = 7
C = 3	R = 9
D = 4	S = 2
E = 5	T = 3
F = 6	U = 4
G = 7	V = 5
H = 8	W = 6
J = 1	X = 7
K = 2	Y = 8
L = 3	Z = 9
M = 4	

Check Digit Computation

Sum of the Calculated Calculated Value	Divided By	Equals Whole#	Equals Decimal
398	11	36	0.18

* = Check Digit	
If the Decimal Is	The Check Digit is
0.09	1
0.18	2
0.27	3
0.36	4
0.45	5
0.54	6
0.63	7
0.72	8
0.81	9
0.90	X
0.00	0

Note:
Any amendments to this information shall be submitted at least 60 days before affixing a vehicle identification number utilizing an amended coding

Note:
Revision Level Documentation is under "VIN Amendments" Tab

Submit To:
Administrator, National Highway Traffic Safety Administration
400 Seventh Street S.W.
Washington D.C. 20590
Attention: VIN Coordinator

VIN Coordinator:
David Coleman
E-Mail: david.coleman@nhtsa.dot.gov

Spartan Chassis, Inc.
1105 Reynolds Rd.
Charlotte, Michigan 48813

Rev. G

Title: VEHICLE IDENTIFICATION NUMBER (Effective VDM January 01, 2003)

Document Number: VIN-1000

Gillig VIN Decoder

370	Vin Number Definition	Bulletin # 370.001 Effective 8/23/00 Approved RDA Page 1 of 4

The following complies with the reporting requirements of Federal Motor Vehicle Safety Standard (FMVSS) Part 565 and Part 571.115.

Vin Digit	Information	Vin Character
1-3	**World Manufacturer Identifier**	
	Gillig - Bus	15G
	Gillig - Incomplete Vehicle	46G
4	**Model or Line**	
	School Bus	A
	Utility Bus	B
	City Transit Bus	C
	City Suburban Bus	D
	Incomplete Vehicle	E
	Shuttle Bus	F
	Low Floor Bus	G
5	**Series and Body Types**	
	30 - Foot	A
	35 - Foot	B
	37 - Foot	C
	40 - Foot or Incomplete Vehicle	D
	27/28/28.5 - Foot	E
6 and 7	**Engine Type**	
	Discontinued - CAT 3208 at 200 HP	01
	Discontinued - CAT 3208 at 210 HP	02
	Discontinued - CAT 3208 at 225 HP	03
	Caterpillar Diesel 3208 (636 cu. in.)	04
	Cummins Diesel NHHTCC (855 cu. in.)	05
	Detroit Diesel 6 - 71 (426 cu. in.)	06
	Detroit Diesel 6V-53 (318 cu. in.)	07
	Discontinued - Detroit 6V-92 at 260 HP	08
	Detroit Diesel 6V-92 (552 cu. in.)	09
	Chevrolet Gas 427 (427 cu. in.)	10
	Detroit Diesel 8.2 (500 cu. in.)	11
	Cummins Diesel L-10 (611 cu. in.)	12
	Ford Gas 460 (460 cu. in.)	13

Vin Digit	Information	Vin Character
6 and 7	**Engine Type (continued)**	
	Detroit Diesel 6V-71 (426 cu.in.)	14
	Caterpillar Diesel 3116 (403 cu.in.)	15
	Caterpillar Diesel 3176 (629 cu.in.)	16
	Detroit Diesel 8V92 (736 cu. in.)	17
	Cummins Diesel C8.3, ISC (504.5 cu.in.)	18
	Cummins Diesel B5.9, ISB (359 cu.in.)	19
	Detroit Diesel Series 50 (518 cu.in.)	20
	Cummins Diesel M11 (661 cu.in.)	21
	Detroit Diesel Series 40 (530 cu.in.)	22
	Detroit Diesel Series 60 (12.7 liter/778 cu.in.)	23
	Caterpillar Diesel 3126 (439 cu.in.)	24
	Caterpillar Diesel C-12 (11.95 liter/729 cu.in.)	25
	Detroit Diesel Series 40 (466 cu. in.)	26
	Cummins Diesel ISL (540 cu. in.)	27
	(Note: Diesel's include CNG & LNG version)	
8	**Type of Brake System**	
	Air	1
	Hydraulic	2
9	**Check Digit**	
	Designated in accordance with instructions in FMVSS Part 565.4	
10	**Model Year**	
	Designated as indicated in Table VI of FMVSS Part 565.4	

Vin Digit	Information	Vin Character
11	**Plant of Manufacture**	
	25800 Clawiter Rd. Hayward, California 94545	1
	1010 Industrial Loop *Discontinued* Hillsboro, Texas 76645	2
12 - 17	**Sequential Serial Numbers as follows:**	

Serial Number Range	Model or Line	Definition
030,000 - 037,999	School Bus, Utility Bus	School Bus Style (Class 7 or 8)
038,000 - 040,000	Heavy Duty Chassis w/Dual Rear Axle w/9,072 - 20,412 KG (20 - 45,000 lb) Susp. (Incomplete Vehicles)	GVW 15,876 KG (35,000 lbs.) or over (Class 8)
040,001 - 050,000	Heavy Duty Chassis w/Single Rear Axle w/9,979 - 11,340 KG (22 - 25,000 lb) Rear Susp. (Incomplete Vehicles	GVW 11,739 KG (25,880 lbs.) or over (Class 6,7, or 8)
050,001 - 059,000	Medium Duty Chassis w/6,804 - 9,978 KG (15 - 21,999 lb) Rear Susp. (Incomplete Vehicles)	GVW 8,618 - 15,422 KG (19,000 - 34,000 lbs.) (Class 5,6,7, or 8)
060,000 - 060,999	Light Duty Chassis (Incomplete Vehicle)	GVW under 8,618 KG (19,000 lbs.) (Class 5)
070,000 - 079,999	Transit bus - Low Floor	9.14 meters (30 ft) & Over Length (Class 7 or 8) One step entry
080,000 - 089,999 & 110,000 - 129,999	Transit Bus, Suburban Bus (Not Low Floor)	9.14 meters (30 ft) & Over Length Class 7 or 8) Three step entry
090,001 - 090,240	Shuttle Bus (Not Low Floor)	Aluminum Body Structure Class 6,7, or 8) Three step entry
90,250 - 109,999	Bus - Low floor	Less than 9.14 meters (30 ft) length (class 6,7, or 8) one step entry

END

Section 9:

Additional Info – Manufacturers' Models/Chassis

Nomenclature used prior to the 2000 Monaco Roadmaster Chassis designations (i.e. before RR-Series naming convention).

The "C" or "H" referred to "Cross flow" (Rear Radiator) or "Horizontal flow" (Side Radiator).

2000-2005 SAFARI MODELS

PANTHER	Roadmaster S-Series
ZANZIBAR	Roadmaster M4R-Series
SAHARA	Roadmaster M4R-Series
CHEETAH	Roadmaster M4R-Series

2003 - 2009

We're excited to announce the new
3-year / 36,000-mile Roadmaster Chassis Warranty.

NAVIGATOR	Roadmaster S-Series
IMPERIAL	Roadmaster RR8S-Series
SCEPTER	Roadmaster RR8S-Series
ENDEAVOR	Roadmaster RR8R-Series
AMBASSADOR	Roadmaster RR4R-Series
NEPTUNE	Roadmaster R4R-Series

© 2002 Monaco Coach Corporation. All rights reserved.

2000-2005 MONACO MODELS

SIGNATURE	Roadmaster S-Series
EXECUTIVE	Roadmaster S-Series
DYNASTY	Roadmaster S-Series
WINDSOR	Roadmaster RR8S-Series
CAMELOT	Roadmaster RR8S-Series
DIPLOMAT	Roadmaster RR8R-Series
KNIGHT	Roadmaster RR4R-Series
CAYMAN	Roadmaster R4R-Series

2003-2005

We're excited to announce the new
3-year / 36,000-mile Roadmaster Chassis Warranty.

MARQUIS	Roadmaster M10S-Series
PATRIOT	Roadmaster M10S-Series *or* M8S-Series
CONTESSA	Roadmaster M8S-Series
MONTEREY	Roadmaster M8R-Series
SANTIAM	Roadmaster RR8R-Series
BARON	Roadmaster R4R-Series

Every Beaver chassis is designed and built for a specific model and floorplan. This custom approach reflects variations in weight distribution and anticipates the impact they can have on the coach's ride and performance. The result? A coach and chassis that work together in perfect harmony, giving you a better ride and smoother handling and maneuverability.

© 2002 Monaco Coach Corporation. All rights reserved.

Our Chassis 2003 - 2005

M-Series introduced

ROADMASTER CHASSIS: R4R | RR4R | RR8R | M-SERIES | RR8S | RR10S | S-SERIES

R4R

- Holiday Rambler: Neptune
- Monaco: Cayman
  Beaver: Baron

RR4R

- Safari: Cheetah

RR8R

- Holiday Rambler: Endeavor, Ambassador
- Monaco: Diplomat, Knight
- Beaver: Santiam

M-SERIES

- Beaver: Marquis, Patriot/Patriot Thunder, Monterey, Contessa

RR8S

- Holiday Rambler: Scepter
- Monaco: Camelot, Windsor
- Safari: Gazelle

RR10S

- Holiday Rambler: Imperial

S-SERIES

- Holiday Rambler: Navigator
- Monaco: Dynasty, The Executive, Signature Series
- Safari: Panther

Roadmaster Chassis comparision 2005 -2006

Chassis Model :		R4R	RR4R	RR8R	M-Series	RR8S	S-Series
Feature	Benefit						
Automatic Traction Control	Better handling in slippery conditions		X	X	X	X	X
Anti-Lock Brakes	Greater strength and a better ride and handling	X	X	X	X	X	X
Frame Rail Dimensions/Hardness	Greater strength and a better ride and handling	1/4" C-Channel 65,000 PSI	1/4" C-Channel 65,000 PSI	3/8" C-Channel 50,000 PSI	10.25" high yield steel frame with 16" o.c. cross members	3-1/2" x 8-5/16" x 3/8" 50,000 PSI Steel* 3-1/2" x 6" x 3/8" 110,000 PSI Steel**	3" x 8" x 1¼" 60,000 PSI Steel
Engine Brake	Uses engine compression to provide supplemental braking, reducing wear and tear on wheel brakes				X	X	X
Exhaust Brake	Uses engine exhaust to provide supplemental braking, reducing wear and tear on wheel brakes	X	X	X	X	X	
Steel Firewall	Extra protection for driver and co-pilot in the event of a collision	X	X	X	X	X	X
Five-Layer Floor with 1-1/2" Steel Tube Construction	The strongest foundation and best insulation you'll find anywhere	X	X	X	8-layer on Aluminum framing	X	X
SmartStructure Integrated Steel Truss System	Enhances chassis strength and provides more pass-through storage	X	X	X		X	X
Semi-Monocoque Construction	Unsurpassed ride and handling						X
Air Bags Strategically Placed	Minimizes rock and roll for a smoother ride and superior handling	4 in line with rails combined with front torsion bar	4 in line with rails combined with front torsion bar	8 outboard mounted	8 outboard mounted 10 w/Tag	8 outboard mounted	10/8 outboard mounted
Cushion Air-Glide Suspension with 3 Monitored Leveling Sensors	Active air suspension adjusts air pressure while you drive, minimizing body sway and "porpoising" and providing superb stability and maneuverability	X	X	X	X	X	X

* Holiday Rambler Scepter and Monaco Camelot

** Holiday Rambler Imperial and Monaco Windsor

ABOUT ROADMASTER CHASSIS SAFETY CONSTRUCTION PERFORMANCE

Our Chassis 2007 - 2009

M-Series discontinued

ROADMASTER CHASSIS: RSR | RR4R | RR8R | RR8S | RR10S | S-SERIES

RSR

- Holiday Rambler: Vacationer Diesel
- Monaco: LaPalma Diesel

RR4R

- Safari: Simba RD
- Holiday Rambler: Neptune
- Monaco: Cayman

RR8R

- Holiday Rambler: Endeavor, Ambassador
- Monaco: Diplomat, Knight
- Safari: Cheetah

RR8S

- Holiday Rambler: Scepter
- Monaco: Camelot
- Beaver: Contessa

RR10S

- Holiday Rambler: Scepter (Tag Axle)
- Beaver: Contessa (Tag Axle)
- Monaco: Camelot (Tag Axle)

S-SERIES

- Holiday Rambler: Navigator, Imperial
- Monaco: Dynasty, The Executive, Signature Series
- Beaver: Marquis, Patriot Thunder

Roadmaster Chassis comparison 2007-2009

Chassis Model:		RSR	F4F	RR4R	RR8R	RR10R	RR10S	S-Series
Feature	**Benefit**							
Automatic Traction Control	Better handling in slippery conditions			X	X	X	X	X
Anti-Lock Brakes	Superior stopping power, especially on steep grades	X	X	X	X	X	X	X
Frame Rail Dimensions/Hardness	Greater strength and a better ride and handling	1/4" C-Channel 50,000 PSI	1/4" C-Channel 50,000 PSI	1/4" C-Channel 50,000 PSI	3/8" C-Channel 50,000 PSI	3/8" C-Channel 50,000 PSI	3-1/2" x 8-5/16" x 3/8" 50,000 PSI Steel* 3-1/2" x 6" x 3/8" 110,000 PSI Steel**	3" x 8" x 1/4" 60,000 PSI Steel
Engine Brake	Uses engine compression to provide supplemental braking, reducing wear and tear on wheel brakes						X	X
Exhaust Brake	Uses engine exhaust to provide supplemental braking, reducing wear and tear on wheel brakes	1	1	1	X	X	X	
Steel Firewall	Extra protection for driver and co-pilot in the event of a collision	X	X	X	X	X	X	X
Multi-Layer Floor with 1-1/2" Square Tubular Construction	The strongest foundation and best insulation you'll find anywhere	X	X	X	X	X	X	X
SmartStructure Integrated Steel Truss System	Enhances chassis strength and provides more pass-through storage	X	X	X	X	X	X	X
Semi-Monocoque Construction	Unsurpassed ride and handling							X
Air Bags Strategically Placed	Minimizes rock and roll for a smoother ride and superior handling	N/A	N/A	4 in line with rails combined with front torsion bar	8 outboard mounted	10 outboard mounted	10 outboard mounted	10 outboard mounted
Cushion Air-Glide Suspension with 3 Monitored Leveling Sensors	Active air suspension adjusts air pressure while you drive, minimizing body sway and "proposing" and providing superb stability and maneuverability	N/A	N/A	X	X	X	X	X

* Holiday Rambler Scepter and Monaco Camelot floorplans less than 42'

** 42' floorplans

[1] Variable geometry turbo charger improves braking performance by acting like an integrated exhaust brake.

© 2009 Monaco RV, LLC. All Rights Reserved. | Contact Us

MONACO LINE - 1999

MODEL	RETAIL PRICE RANGE	BRAND
Royale Coach.....	$550,000-$900,000	Monaco
Signature Series.....	$365,000-$415,000	Monaco
Executive.....	$265,000-$340,000	Monaco
Navigator.....	$260,000-$330,000	Holiday Rambler
Dynasty.....	$215,000-$270,000	Monaco
Imperial.....	$190,000-$230,000	Holiday Rambler
Windsor.....	$165,000-$200,000	Monaco
Endeavor-Diesel.....	$145,000-$155,000	Holiday Rambler
Diplomat.....	$140,000-$150,000	Monaco
Endeavor-Gasoline.....	$ 80,000-$105,000	Holiday Rambler
Vacationer.....	$ 75,000-$ 85,000	Holiday Rambler
La Palma.....	$ 70,000-$ 90,000	Monaco
Admiral.....	$ 65,000-$ 85,000	Holiday Rambler

Beaver Models/Prices in 2006 (top 3)

2006 Marquis
Starting at $501,000

2006 Patriot
Starting at $348,000 *(Patriot Thunder Starting at $387,000)*

2006 Monterey
Starting at $243,000

Monaco Models/Prices - 2006

2006 SIGNATURE SERIES
Starting at $536,000

2006 THE EXECUTIVE
Starting at $426,000

2006 DYNASTY
Starting at $328,000

2006 WINDSOR
Starting at $270,000

2006 CAMELOT
Starting at $245,000

2006 DIPLOMAT
Starting at $195,000

2006 KNIGHT
Starting at $170,000

2006 CAYMAN
Starting at $135,000

Beaver Motor Coaches 2001 Marquis Chassis Matrix		
Model	Magnum® D-Series Blue Diamond™ Chassis D36A455 for 40 ft. models	Magnum® D-Series Blue Diamond™ Chassis D36A455 for 42 ft. models with Tag Axle
Engine	Caterpillar® C-12 Turbocharged Computerized Electronic Diesel Engine Cat C-12 Performance Ratings	Caterpillar® C-12 Turbocharged Computerized Electronic Diesel Engine Cat C-12 Performance Ratings
Horsepower & Torque	455 HP @ 2,100 rpm 1,550 lb.-ft. @1,200 rpm	455 HP @ 2,100 rpm 1,550 lb.-ft. @1,200 rpm
Transmission	Allison® MH 4000 6-Speed World Transmission w/ 2 Overdrives	Allison® MH 4000 6-Speed World Transmission w/ 2 Overdrives
GVWR	36,200 lbs.	47,000 lbs.
GCWR	41,200 lbs.	52,000 lbs.
Axles	Front: Westport® 13,200 lbs. Rear: Rockwell® 23,000 lbs. Tag: N/A	Front: Westport® 13,200 lbs. Rear: Rockwell® 23,000 lbs. Tag: Westport® Retractor 10,800 lbs.
Brakes	Meritor® Four-Wheel Air Disc ABS Equipped	Meritor® Four-Wheel Air Disc ABS Equipped
Steering	TRW Ross® Power Steering	TRW Ross® Power Steering
Suspension	Magnum® Blue Diamond™ Patented 8-Bag Outboard Suspension, Mathematically Optimized	Magnum® Blue Diamond™ Patented 12-Bag Outboard Suspension, Mathematically Optimized
Tires	Toyo® 11R22.5 Radial Tires	Toyo® 11R22.5 Radial Tires
Frame Rails	10-1/4" High Yield Steel - All Magnum® Frame Rails Are Drilled Using State-Of-The-Art Computer-Controlled Machinery	10-1/4" High Yield Steel - All Magnum® Frame Rails Are Drilled Using State-Of-The-Art Computer-Controlled Machinery
Fuel Capacity	148 Gallons (Dual Fill)	148 Gallons (Dual Fill)
Rear End Ratio	4:30:1	4:30:1

Section 10:

Koni FSD vs Bilstein - shock design/technology

Written by Steve. S *(formatted and condensed by Mike S.)*

Koni's twin tube shocks have an impressive design compared to the old set of twin tube shocks I disassembled back in the 1970's when I wanted to understand how they worked. I'll try to explain some of the impressive features:

Koni FSD's have a twin tube design, a smaller piston and active cylinder but the piston has a special valve in it. This valve opens up when the shock force becomes high (such as when hitting a bump of any type) and allows the suspension to sock up the bumps. Other than that, they have fairly high levels of low speed damping, especially in rebound (high forces required to extend the shock slowly) to control bouncing. One feature of unpressurized twin tube shocks is by nature they can't provide much in the way of high speed compression damping. If you compress one of these shocks very quickly, the fluid can cavitate, allowing the shock to rapidly compress easily. Once this happens, the shock can also quickly rebound with little damping - but only as a result of that single bump. This "feature" is often considered a negative in performance vehicles (bouncing tires), but in a coach I can see this as a nice way to soak up "jarring" bumps. It is the tires and axle that moves rapidly in this case, not the coach.

When comparing the Konis to monotube shocks, the most important thing to realize is that there is a valve at the bottom of the shock (the foot valve) that acts between the inner tube and the outer tube's cavity. During a compression stroke not only is a valve (made up of washers similar to a Fox shock) in the piston controlling the compression force, the foot valve is simultaneously resisting the displacement of fluid that the shaft entering the inner tube creates. This foot valve causes all of the oil within the inner tube to greatly increase in pressure. This pressure increase is proportional to the force and is effectively unlimited. Unlike a monotube shock with a floating piston, where the pressure is typically in the 300-400 psi range, this foot valve can create pressures well into the 1000's of psi range and up. This ability to increase pressure virtually eliminates the risk of cavitation during a compression stroke. Also, since there are two sets of compression valves, one within the piston (acting on a large volume displacement of oil) and the other in the foot valve (acting on a smaller volume displacement of oil), this provides additional and non-linear fine tuning of the compression force vs velocity.

During a rebound stroke, just like a monotube shock, the oil pressure builds up between the piston and the top of the shock (where the shaft exits). Since the pressure is directly proportional to the

force applied to the shock, the rebound force is essentially limited only by the mechanical stresses the piston and valves have to handle. This is essentially the same as a monotube shock.

During compression and rebound the oil above the piston undergoes a pressure increase. A small, intentional "bleed" feature at the very top of the shock between the inner tube and "outer tube cavity" allows any air or gas in the oil to flow into the exterior cavity. This guarantees that the inner tube is always 100% filled with oil and there is no chance that oil and gas will be mixed within it.

Most importantly as far as ride is concerned, Koni developed and incorporated into their FSD shocks a special valve that is indeed frequency dependent. Essentially the way it works is the oil is pumped out of a small cavity within the piston during a change in direction of the stroke. Oil is allowed to fill the cavity through a orifice at a controlled rate and once filled, a very small internal "piston" (within the main piston) moves, opening and closing a secondary valve. This secondary, bypass valve allows the shock to provide "soft", minimal levels of force and thus minimal damping during rapid and/or short movements, but at the same time during slow, longer movements the secondary valve closes. Once the secondary valve is closed, the shock operates on the stiff primary valve and can provide very high levels of damping to control cyclic bouncing and cornering "lean", etc. Ultimately this frequency dependent valve allows the shock to provide both a soft, compliant ride over jarring bumps as well as provide maximum damping and control of "bouncing up and down", etc. This means high levels of controlled damping for optimal handling, plus a softer compliant ride on rough roads. You can read more about Koni's FSD valve design here: US patent #7395907

Comparing Koni's FSD twin tube shock to the Bilstein's monotube shock:

1. During compression, Koni's FSD generates essentially unlimited pressure within the inner tube to control any potential cavitation. The Bilstein monotube, floating piston design on the other hand is limited to the compressive force of the pre-charged nitrogen pressure multiplied by the area of the piston. Once the force exceeds this, the monotube shock will further compress the nitrogen, moving the floating piston downwards and allow the shock oil to potentially cavitate above the piston. To make matters worse, once the force exceeds the nitrogen precharge, the vacuum created above the piston allows small amount of air to be sucked past the shaft seal and enter the shock. This potential air contamination would slowly degrade the performance of the Bilstein shock over time (as I'm sure you know, this is one of the reasons we need to regularly rebuild our high performance off-road shocks).

2. During a rebound stroke, both shocks are essentially only limited by the strength of the mechanical pieces as far as damping potential.

3. While Koni's FSD shock will always have 100% oil in the main tube area due to the continuous positive pressure and "bleed port feature", Bilstein's floating piston design will always slowly have nitrogen leak past the internal floating piston. Eventually the nitrogen will mix with the oil enough to reduce the performance of the shock. The mix of nitrogen, air and shock oil causes cavitation and further, a more rapid breakdown of the shock oil (this is another reason we need to regularly rebuild out high performance off-road shocks).

4. Bilstein also has a piston that is designed to provide improved (lower) medium and high speed damping forces, but their design works by a force activated valve opening during compression. The Koni FSD design is able to reduce the medium and high speed damping forces by a factor of roughly 3, while Bilstein's "comfort" valve design is only able to, at best, very marginally reduce the medium and high speed damping force compared to the low speed damping force (by using the fluid flow to dynamically "hold" the spring valve open a little longer than the initial opening force would dictate).

5. The one area where the Bilstein monotube shock does have an advantage over the Koni FSD twin tube design is the piston area. By having roughly 3 times the piston area (for the same overall shock diameter), the operating shock oil pressure is roughly 3 times lower in the Bilstein shock and this relates to lower forces and material stresses. The larger piston also flows roughly 3 times more oil as the shock compresses and expands so this means the valve has more fluid to work on, again making it easier to develop high levels of damping force. Finally, since the oil is directly in contact with the outer wall of the shock, heat is more quickly removed from the oil. The reality though is due to our application (not an on or off road racing application where shocks can overheat) and the fact that the Koni FSD is able to self-generate an essentially unlimited amount of pressure within the oil, regardless of direction of piston travel (compression or rebound), these potential weaknesses are easily overcome.

The true reality is both Bilstein and Koni are premium shock manufacturers and either shock should provide many years of fairly consistent performance. Ultimately as far as us Class A motor home owners are concerned, it all comes down to the shock valving. Here Koni has a distinct advantage with their FSD valving. Having said that, it still comes down to the shock tuning that the engineer selected for the particular application. The Koni FSD could still be excessively firm over harsh, jarring bumps and/or it could still be excessively soft. If Bilstein selected more optimal valving for the application, their shock could provide a more comfortable ride compared to the Koni FSD.

Bilstein's use a very robust single tube design, a much larger shock cylinder and piston, combined with a floating piston and a high level of nitrogen (or other) gas pressure behind the floating piston. With the large piston and nitrogen charge, the fluid always remains as a fluid and the piston needs to be designed precisely in order to provide a good ride that isn't harsh. These shocks should be able to handle much more damping without fading or cavitating, but I'm not convinced this is really all that important in a "non-high performance" luxury coach.

For the motor home, especially since the air springs are so highly non-linear, I keep imagining wanting the absolute minimum medium and high speed damping. I imagine that all I would want is a very basic stack of large washers that are tuned to quickly damp out the natural "bounce" frequency (low speed damping) of the coach on the air springs. Once the forces get higher than that, I want the valve stack to open without limit so that with any bump the suspension is allowed to move as easily as possible - especially in compression (essentially limiting the maximum force to the force required to start opening the valves).

Another benefit to the Koni FSD option is Koni decided to design valving that is unique for the front and the rear of the RR8R chassis. The Koni 8805-1004 are specifically softer, with lower damping forces for use at the front axle (lower weights), while the Koni 8805-1005 have slightly more damping for use at the substantially heavier rear axle.

Source:

https://www.rv.net/forum/index.cfm/fuseaction/thread/tid/23970267/print/true.cfm

END

This document was created by Mike Shumack (a.k.a. CountryB).

Please report any errors or omissions to mshumack@bellsouth.net). I hope you find this information useful.